DISCS

1. Racing brake discs

TAROX Quality

TAROX racing brake discs are available for any kind of racing car or single-seater. The iron casting used in the manufacturing process come from specialised foundries that are **ISO9000** and **TÜV** certified.

Two manufacturing process give TAROX discs its outstanding quality.

a) All racing discs are subject to structural stress relieving **heat treatment** to deliver the best performances in all conditions.

b) After being machined the surface of each discs is **manually ground** to a tolerance approaching 0.015 mm creating a perfectly level surface to ensure that the discs will run true.

Discs size, & face types

TAROX racing brake discs are available for any kind of racing car or single seater and range from 248 mm to 400 mm .
Racing discs are available according to the following face types.

C83:

Straight grooves

D95:

Cross drilled – all drill countersunk for crack reductions

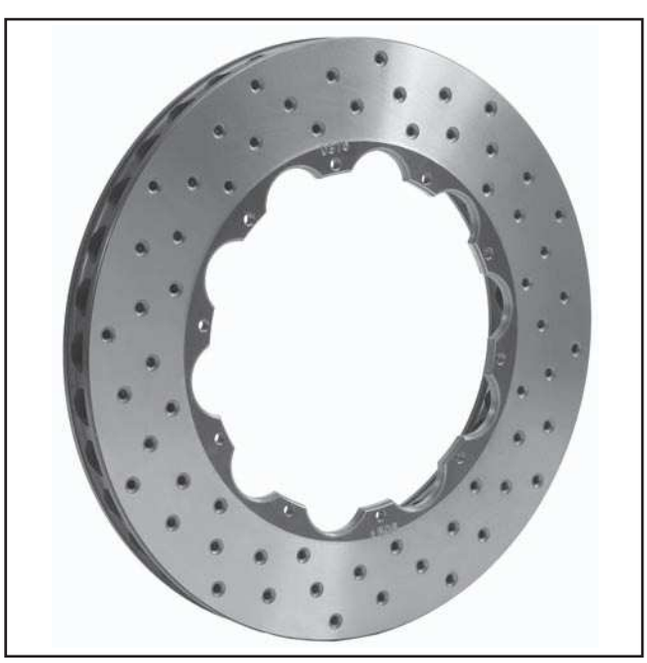

F2000:

Curved grooves

Sport Japan Plus:

Curved grooves alternate with cross drills

In some classes of racing brakes are heavily regulated by the relevant technical rules; in some cases groves on the braking surface are not allowed or a limited. If this is the case it is essential to advise TAROX and supply a accurate drawing of how the brake surface should look.

TAROX lists a variety of ready-to-order discs which should cover all the racing needs. If a disc with bespoken dimension is needed this can be order by using the relevant order form at the end of this catalogue.

Matching discs & calipers: the "F" Factor
For all discs listed in this catalogue we provide the size of the maximum pad depth ("F"). Some TAROX calipers work with 50 mm brake surface width, other with 60 mm and when matching the discs with the caliper is essential to take into account this dimension to ensure the best match between discs and calipers. If in doubt please contact the TAROX Technical Department for advice.

Disc Mounting: Bolted vs. Floating
The racing discs list features both discs with both floating and bolted arrangements. By rule of thumbs the floating arrangement is not recommended in all conditions where the track is not perfectly clean and dirt or debris may interfere with the floating mechanism causing vibrations and run out. If in doubt as to what arrangement is more suitable for your car the TAROX Technical Department.

TAROX Racing Discs Codes

Each set of TAROX racing brake discs feature a unique part number that is explained as follows.

For example, part no. **C25421AF** means
C: Competition range
254: Disc diameter in mm (in this case 254 mm)
21: Disc thickness in mm (in this case 21 mm)
A: **TAROX** internal code
F: Type of facing (in this case F2000)
The following table will assist you in the interpretation of TAROX codes for type of facings.

C	Corresponds to	C83
D	Corresponds to	D95
F	Corresponds to	F2000
S	Corresponds to	SPORT JAPAN +

TAROX

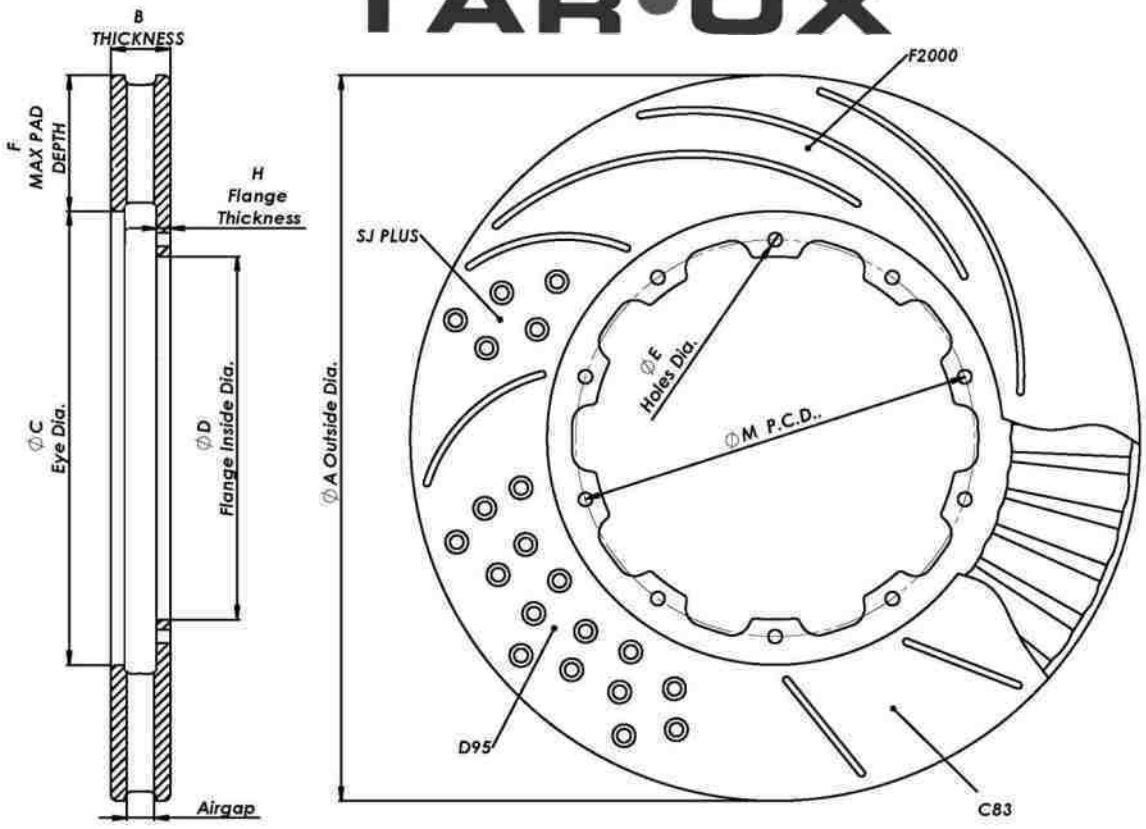

PART NUMBER	Ø 'A' Outside Diameter	'B' Th	Ø 'C' Diameter	Ø 'D' Diameter	MOUNTING HOLES				'F' Max Pad Depth	'H' Th	AIR GAP
					ØE HOLES	Ø M P.C.D.	N°	Fixing type			
C25421AX	254	21	154,9	125,8	6,4	139,7	6	Bolted	50	5,5	9
C25721AX	257	21	154,9	125,8	6,4	139,7	6	Bolted	51	5,5	9
C26025AX	260	25,4	154,9	125,8	6,4	139,7	6	Bolted	53	5	14
C26421AX	264	21	154,9	125,8	6,4	139,7	6	Bolted	55	5,5	9
C26716AX	267	16	178	145	6,4	162,0	8	Bolted	45	4,5	6
C26721AX	267	21	157	125,8	6,4	139,7	6	Bolted	55	5,5	9
C26728AX	267	28	157	125,8	6,4	139,7	6	Bolted	55	4,5	18
C27816AX	278	16	187,5	156	8,45	176,1	8	Bolted	45	4,5	6
C27816BX	278	16	198	158	9,5	181,5	8	Floating	40	4,5	6
C28017AX	280	17	191,4	146,5	9,5	171,4	8	Floating	44	5	7
C28017BX	280	17	193,5	159	6,5	176,8	8	Bolted	43	4,5	7
C28020AX	280	20	192	154	9,5	176,8	8	Floating	44	5	9
C28021AX	280	21	192	159,3	6,4	176,8	8	Bolted	44	5	10
C28022AX	280	22	180,3	152	6,4	165,1	8	Bolted	50	4,5	12
C28024AX	280	24	192	159,3	6,4	176,8	8	Bolted	44	5	13
C28025AX	280	25,4	174	141	6,4	158,8	8	Bolted	53	5	14
C28025BX	280	25,4	192	159,3	6,4	176,8	8	Bolted	44	5	14
C28025CX	280	25,4	192	154	9,5	176,8	8	Floating	44	5	14
C28025DX	280	25,4	197	164	6,4	177,8	10	Bolted	42	6	12
C28025EX	280	25,4	197	164	6,4	177,8	8	Bolted	42	5	14
C28525AX	285	25,4	190	141	6,4	158,8	8	Bolted	48	4,5	15
C28525BX	285	25,4	197	164	6,4	177,8	12	Bolted	44	5	14
C28528AX	285	28	182,5	141	6,4	158,8	8	Bolted	51	6,2	15
C29025AX	290	25,4	180,3	152,9	6,4	165,1	8	Bolted	55	6,2	12

TAROX

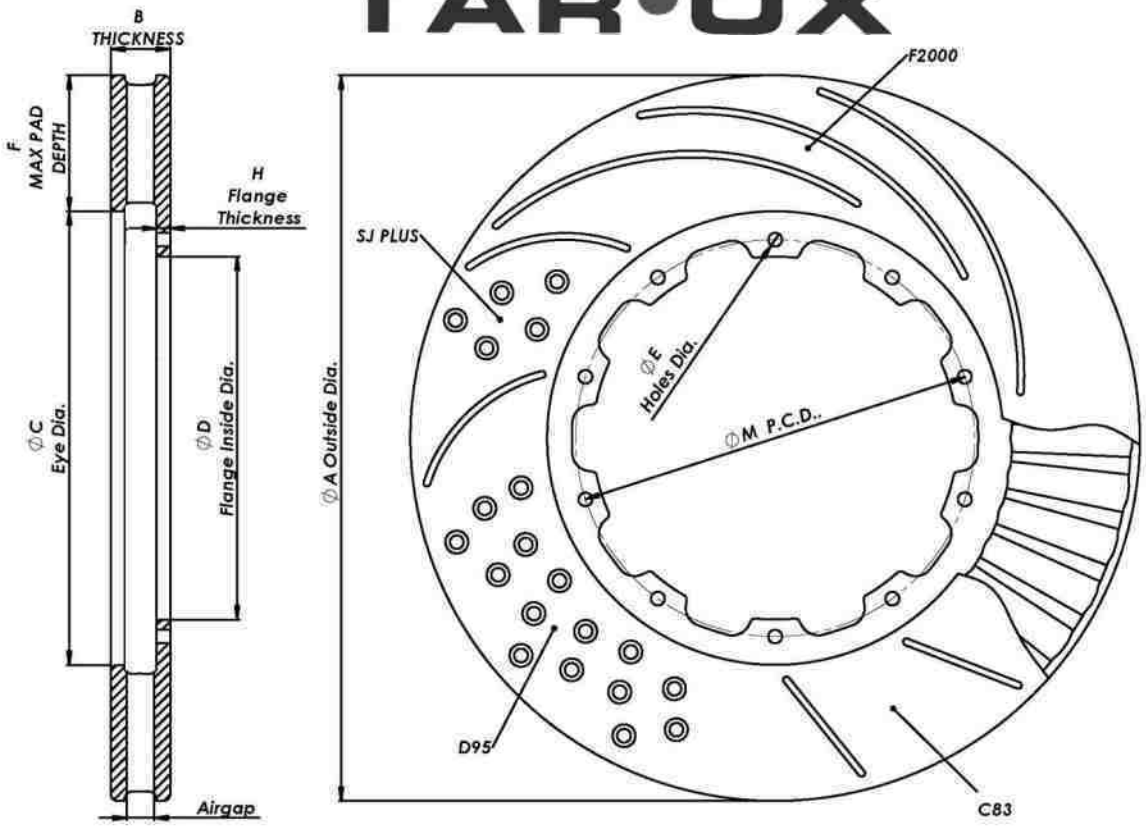

PART NUMBER	Ø 'A' Outside Diameter	'B' Th	Ø 'C' Diameter	Ø 'D' Diameter	MOUNTING HOLES				'F' Max Pad Depth	'H' Th	AIR GAP
					ØE HOLES	Ø M P.C.D.	N°	Fixing type			
C29028AX	290	28	180	153	6	165,1	8	Bolted	55	6	15
C29525AX	295	25,4	193	164	6,4	177,8	10	Bolted	51	6	12
C29525BX	295	25,4	193	164,3	6,4	177,8	12	Bolted	51	6	12
C29525CX	295	25,4	204	164	6,4	177,8	12	Bolted	46	5,5	13
C29528AX	295	28	193	164	6,4	177,8	12	Bolted	51	5,5	16
C29528BX	295	28	195,1	164,3	6,4	177,8	12	Bolted	50	6	15
C29528CX	295	28	192,4	154	9,5	177,8	12	Floating	51	5,5	16
C29532AX	295	32	193,4	153	6,5	177,8	10	Bolted	51	6,5	18
C29532BX	295	32	193,4	153	9,5	177,8	10	Floating	51	6,5	18
C30028AX	300	28	203,2	164	6,4	177,8	12	Bolted	48	5,5	16
C30421AX	304	21	195	164,3	6,4	177,8	12	Bolted	55	5,5	9
C30425AX	304	25,4	201	161	6,35	177,8	12	Bolted	52	5,5	13
C30425BX	304	25,4	203,2	164	6,4	177,8	10	Bolted	50	5	14
C30425CX	304	25,4	203,2	164	6,4	177,8	12	Bolted	50	6,5	11
C30425DX	304	25,4	203,2	164,5	6,4	177,8	12	Bolted	50	5	14
C30425EX	304	25,4	203,2	164	6,4	177,8	12	Bolted	50	5	14
C30428AX	304	28	203,2	164,3	6,4	177,8	12	Bolted	50	5,5	16
C30428BX	304	28	203,2	152,6	9,5	177,8	12	Floating	50	5,5	16
C30428CX	304	28	210,6	174	6,4	190,5	12	Bolted	47	5,5	16
C30432AX	304	32	191	164,3	6,4	177,8	12	Bolted	57	6,5	18
C31025AX	310	25,4	210	176	6,5	190,5	12	Bolted	50	5,5	13
C31028AX	310	28	210	176	6,5	190,5	12	Bolted	50	5,5	16
C31028BX	310	28	220	190	6,4	203,2	12	Bolted	45	5,5	16
C31030AX	310	30	210	163,1	6,4	177,8	12	Bolted	50	6,5	16

TAROX

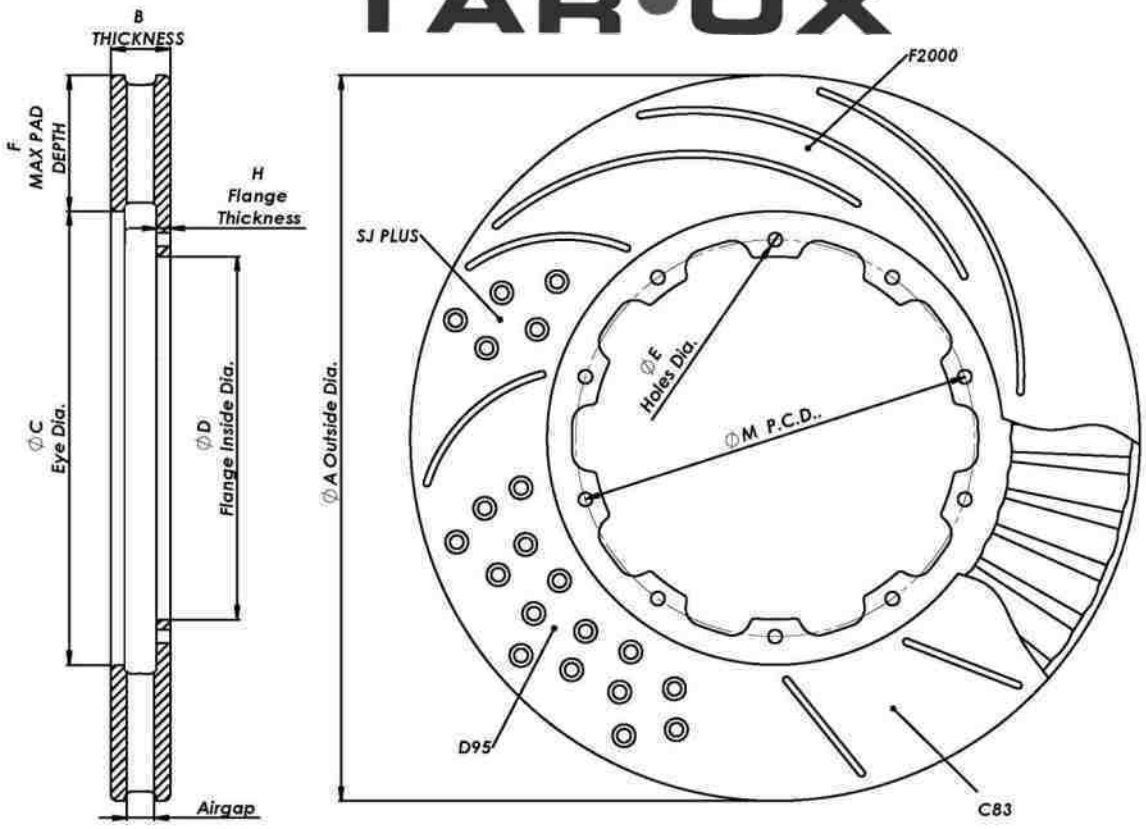

PART NUMBER	Ø 'A' Outside Diameter	'B' Th	Ø 'C' Diameter	Ø 'D' Diameter	MOUNTING HOLES				'F' Max Pad Depth	'H' Th	AIR GAP
					ØE HOLES	Ø M P.C.D.	N°	Fixing type			
C31032AX	310	32	206,9	163,1	6,4	177,8	12	Bolted	52	6,5	18
C31525AX	315	25,4	220	190	6,4	203,2	12	Bolted	48	6	12
C31528AX	315	28	195,1	164,3	6,4	177,8	12	Bolted	60	6	15
C31528BX	315	28	195	164,5	6,4	177,8	12	Bolted	60	6,5	14
C31528CX	315	28	210	164,3	6,4	177,8	12	Bolted	53	6	15
C31530AX	315	30	220	190	6,4	203,2	12	Bolted	48	5,5	18
C31532AX	315	32	210	164	6,4	177,8	12	Bolted	53	6,5	18
C32528AX	325	28	222	187	6,4	203,2	12	Bolted	52	6,5	14
C32530AX	325	30	218	174	9,5	198,0	10	Floating	54	6,5	16
C32532AX	325	32	218	174	9,5	198,0	10	Floating	54	6,5	18
C32536AX	325	36	218	174	9,5	198,0	10	Floating	54	6,5	22
C32828AX	328	28	221,8	190	6,4	203,2	12	Bolted	53	5,5	16
C32828BX	328	28	222	190	6,4	203,2	12	Bolted	53	6,5	14
C32830AX	328	30	222	190	6,4	203,2	12	Bolted	53	6,5	16
C32832AX	328	32	233	192	9,5	218,0	8	Floating	48	6,5	18
C32836AX	328	36	200,9	160	9,5	184,2	10	Floating	64	6,5	22
C32842AX	328	42	200,9	160	9,5	184,1	10	Floating	64	6,5	28
C33025AX	330	25,4	228	196	6,4	212,0	12	Bolted	51	5,5	13
C33025BX	330	25,4	233	201,5	6,4	214,2	12	Bolted	49	5,5	13
C33028AX	330	28	220	190	6,4	203,2	12	Bolted	55	5,5	16
C33028BX	330	28	227,4	190	6,4	203,2	12	Bolted	51	5	17
C33028CX	330	28	230	190	6,4	203,2	12	Bolted	50	5,5	16
C33030AX	330	30	230	190	6,4	203,2	12	Bolted	50	5,5	18
C33032AX	330	32	220	190	6,4	203,2	12	Bolted	55	6,5	18

TAROX

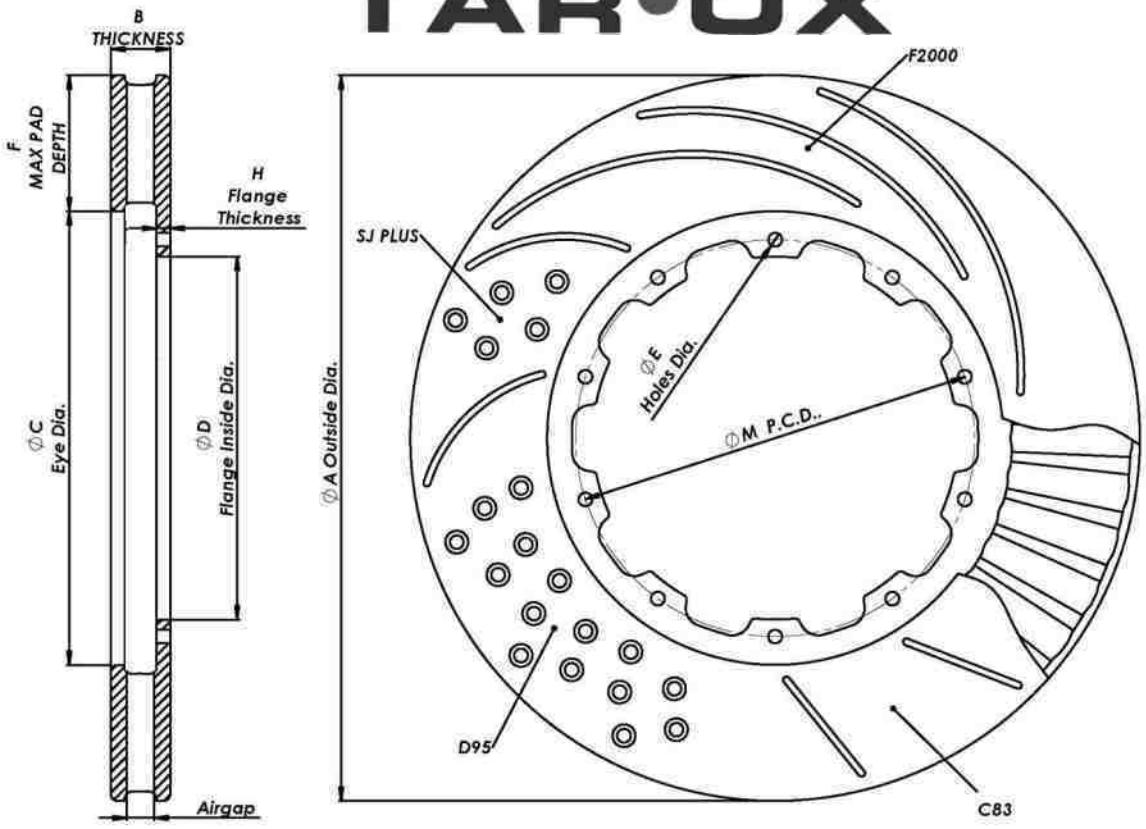

PART NUMBER	Ø 'A' Outside Diameter	'B' Th	Ø 'C' Diameter	Ø 'D' Diameter	MOUNTING HOLES				'F' Max Pad Depth	'H' Th	AIR GAP
					ØE HOLES	Ø M P.C.D.	N°	Fixing type			
C33032BX	330	32	228	188	6,4	203,2	12	Bolted	51	5,5	20
C33032CX	330	32	227,4	190	6,4	203,2	12	Bolted	51	6,5	18
C33032DX	330	32	227	178	9,5	203,2	12	Floating	52	5,5	20
C33032EX	330	32	226	179	9,5	203,2	12	Floating	52	5,5	20
C33036AX	330	36	219,4	190	6,4	203,2	12	Bolted	55	6,5	22
C34328AX	343	28	240,6	212	6,4	228,6	12	Bolted	51	5,5	16
C34328BX	343	28	246	208	9,5	228,6	12	Floating	49	5,5	16
C34332AX	343	32	230	201,3	6,4	215,9	12	Bolted	57	5,5	20
C34332BX	343	32	236	190,5	9,5	215,9	12	Floating	54	5,5	20
C34332CX	343	32	249	208	6,4	228,6	12	Bolted	47	5,5	20
C34336AX	343	36	233	195,9	6,4	215,9	12	Bolted	55	7,5	20
C35528AX	355	28	261,6	233	6,4	247,6	12	Bolted	47	5,5	16
C35532AX	355	32	248	217	9,5	233,0	10	Floating	54	8	15
C35532BX	355	32	244	195	6,4	215,9	12	Bolted	56	6,5	18
C35628AX	356	28	238,6	212	6,4	228,6	12	Bolted	59	5,5	16
C35628BX	356	28	261,6	214	6,4	228,6	12	Bolted	47	5,5	16
C35628CX	356	28	251,6	202,6	9,5	228,6	12	Floating	52	5	17
C35628DX	356	28	252,6	220	6,4	240,0	12	Bolted	52	5	17
C35632AX	356	32	248	192,1	9,5	217,6	12	Floating	54	5,5	20
C35632BX	356	32	244,6	202,8	9,5	228,6	12	Floating	56	5,5	20
C35632CX	356	32	245	214	6,4	228,6	12	Bolted	56	5,5	20
C35632DX	356	32	251	214	6,4	228,6	12	Bolted	53	5	21
C35632EX	356	32	251,6	202,6	6,4	228,6	12	Bolted	52	5,5	20
C35632FX	356	32	261,6	225,5	6,4	240,0	12	Bolted	47	5,5	20

TAROX

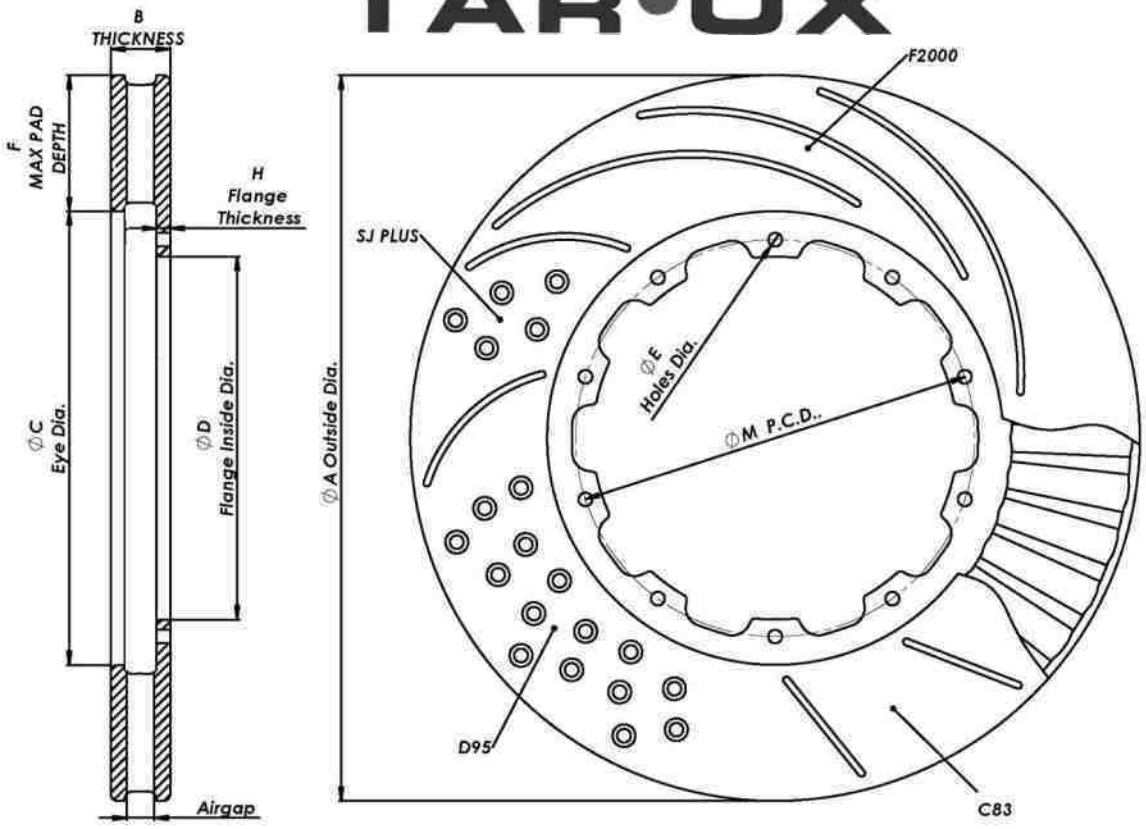

PART NUMBER	Ø 'A' Outside Diameter	'B' Th	Ø 'C' Diameter	Ø 'D' Diameter	MOUNTING HOLES				'F' Max Pad Depth	'H' Th	AIR GAP
					ØE HOLES	Ø M P.C.D.	N°	Fixing type			
C35632GX	356	32	258	215	9,5	240,0	12	Floating	49	5	21
C35632HX	356	32	258,6	215	9,5	240,0	12	Floating	49	5,5	20
C35632IX	356	32	261,6	215	9,5	240,0	12	Floating	47	5	21
C35632LX	356	32	261,6	215	9,5	240,0	12	Floating	47	5	21
C35636AX	356	36	244,6	214	6,4	228,6	12	Bolted	56	6,5	22
C35636BX	356	36	245	208	6,4	228,6	12	Bolted	56	6,5	22
C35636CX	356	36	244,6	202,8	6,4	228,6	12	Bolted	56	5,5	24
C35636DX	356	36	244,6	202,8	9,5	228,6	12	Floating	56	5,5	24
C35636EX	356	36	251,6	202,6	9,5	228,6	12	Floating	52	6	23
C36034AX	360	34	227,2	182,6	9,5	208,0	10	Floating	66	5,5	22
C36232AX	362	32	238	195	6,4	215,9	12	Bolted	62	6,5	18
C36232BX	362	32	251,4	208	6,4	228,6	12	Bolted	55	6,5	18
C37036AX	370	36	252	224	6,4	241,3	12	Bolted	59	6	23
C37535AX	375	35	261	221	9,5	245,0	10	Floating	57	8	18
C37536AX	375	36	257	225	6,4	241,3	12	Bolted	59	6,5	22
C37536BX	375	36	257	231	6,4	247,6	12	Bolted	59	6,5	22
C37536CX	375	36	269,7	245	6,4	260,4	12	Bolted	53	6,5	22
C37832AX	378	32	250	218	8,4	235,8	10	Bolted	64	7	17
C37832BX	378	32	250	220	8,4	235,8	10	Bolted	64	7	17
C37832CX	378	32	266,8	215	9,5	240,0	12	Floating	56	5,5	20
C37832DX	378	32	268	215	6,4	240,0	12	Bolted	55	5,5	20
C37832EX	378	32	268	215	9,5	240,0	12	Floating	55	5	21
C37832FX	378	32	282	235,4	9,5	260,4	12	Floating	48	5,5	20
C37836AX	378	36	264	216	9,5	240,0	12	Floating	57	5	25

TAR•OX

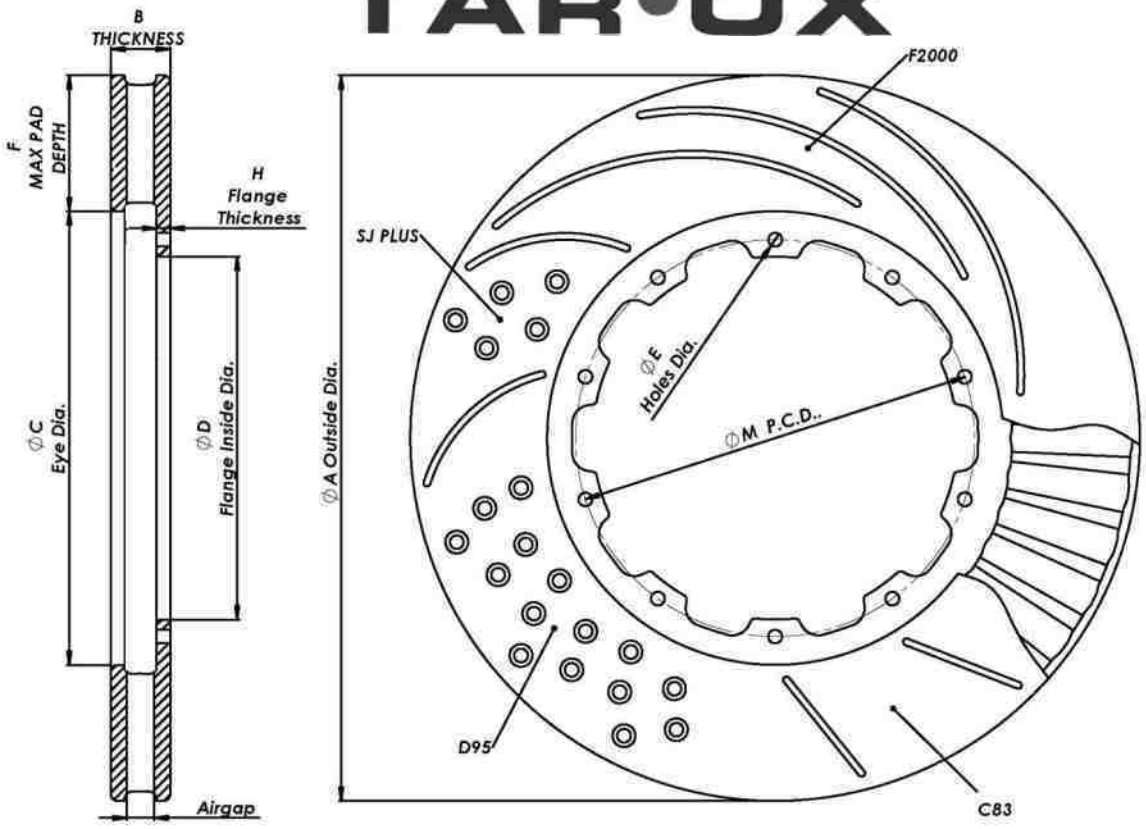

PART NUMBER	Ø 'A' Outside Diameter	'B' Th	Ø 'C' Diameter	Ø 'D' Diameter	MOUNTING HOLES				'F' Max Pad Depth	'H' Th	AIR GAP
					ØE HOLES	Ø M P.C.D.	N°	Fixing type			
C37836BX	378	36	275	234,5	9,5	258,0	10	Floating	52	8	19
C38036AX	380	36	270	215	9,5	240,0	12	Floating	55	5,5	24
C38040AX	380	40	266	216	9,5	240,0	12	Floating	57	5,5	28
C39032AX	390	32	268,8	243	6,4	260,0	12	Bolted	61	6	19
C39036AX	390	36	268,8	243	6,4	260,0	12	Bolted	61	6,5	22
C40032AX	400	32	280	239	6,4	266,0	12	Bolted	60	6,5	18
C40032BX	400	32	280	239	9,5	266,0	12	Floating	60	6,5	18
C40036AX	400	36	280	239	9,5	266,0	12	Floating	60	6,5	22
C40036BX	400	36	300	259	9,5	286,0	12	Floating	50	6,5	22

TAROX

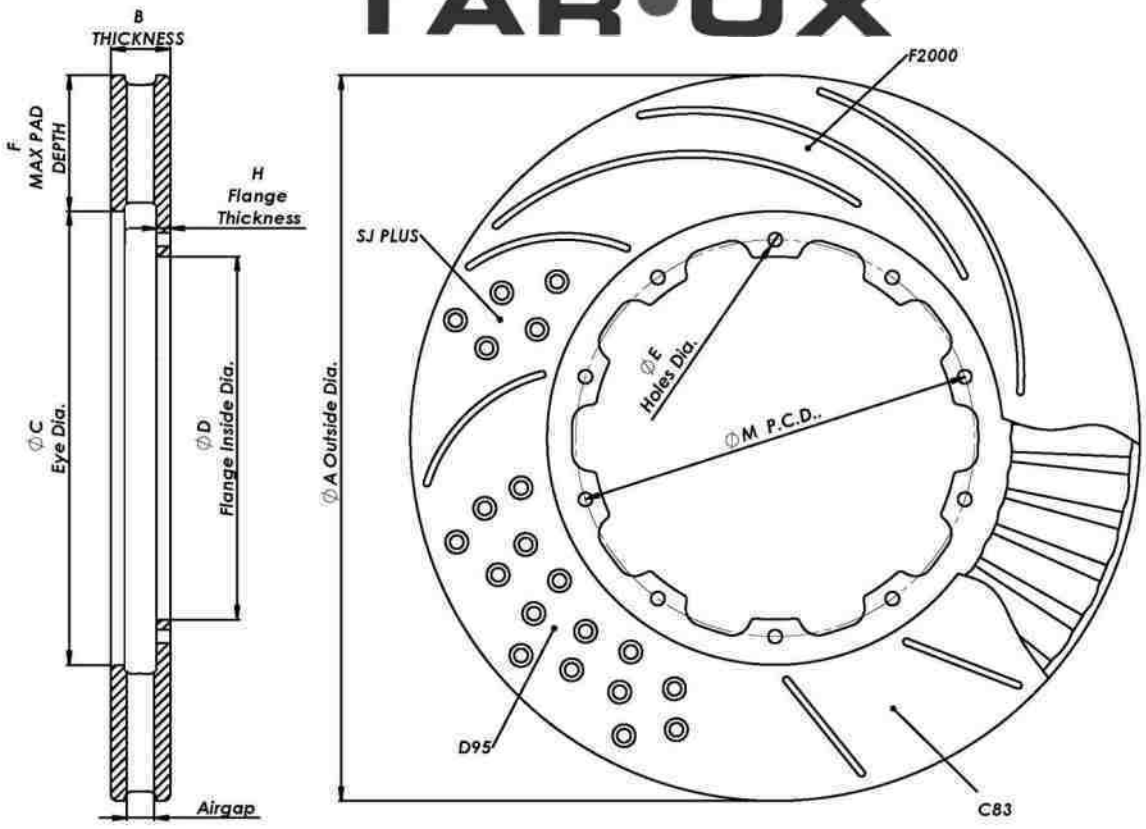

PART NUMBER	Ø 'A' Outside Diameter	'B' Th	Ø 'C' Diameter	Ø 'D' Diameter	MOUNTING HOLES				'F' Max Pad Depth	'H' Th	AIR GAP
					ØE HOLES	Ø M P.C.D.	N°	Fixing type			
C25421AX	254	21	154,9	125,8	6,4	139,7	6	Bolted	50	5,5	9
C25721AX	257	21	154,9	125,8	6,4	139,7	6	Bolted	51	5,5	9
C26025AX	260	25,4	154,9	125,8	6,4	139,7	6	Bolted	53	5	14
C26421AX	264	21	154,9	125,8	6,4	139,7	6	Bolted	55	5,5	9
C26716AX	267	16	178	145	6,4	162,0	8	Bolted	45	4,5	6
C26721AX	267	21	157	125,8	6,4	139,7	6	Bolted	55	5,5	9
C26728AX	267	28	157	125,8	6,4	139,7	6	Bolted	55	4,5	18
C27816AX	278	16	187,5	156	8,45	176,1	8	Bolted	45	4,5	6
C28017BX	280	17	193,5	159	6,5	176,8	8	Bolted	43	4,5	7
C28021AX	280	21	192	159,3	6,4	176,8	8	Bolted	44	5	10
C28022AX	280	22	180,3	152	6,4	165,1	8	Bolted	50	4,5	12
C28024AX	280	24	192	159,3	6,4	176,8	8	Bolted	44	5	13
C28025AX	280	25,4	174	141	6,4	158,8	8	Bolted	53	5	14
C28025BX	280	25,4	192	159,3	6,4	176,8	8	Bolted	44	5	14
C28025DX	280	25,4	197	164	6,4	177,8	10	Bolted	42	6	12
C28025EX	280	25,4	197	164	6,4	177,8	8	Bolted	42	5	14
C28525AX	285	25,4	190	141	6,4	158,8	8	Bolted	48	4,5	15
C28525BX	285	25,4	197	164	6,4	177,8	12	Bolted	44	5	14
C28528AX	285	28	182,5	141	6,4	158,8	8	Bolted	51	6,2	15
C29025AX	290	25,4	180,3	152,9	6,4	165,1	8	Bolted	55	6,2	12
C29028AX	290	28	180	153	6	165,1	8	Bolted	55	6	15
C29525AX	295	25,4	193	164	6,4	177,8	10	Bolted	51	6	12
C29525BX	295	25,4	193	164,3	6,4	177,8	12	Bolted	51	6	12
C29525CX	295	25,4	204	164	6,4	177,8	12	Bolted	46	5,5	13

TAROX

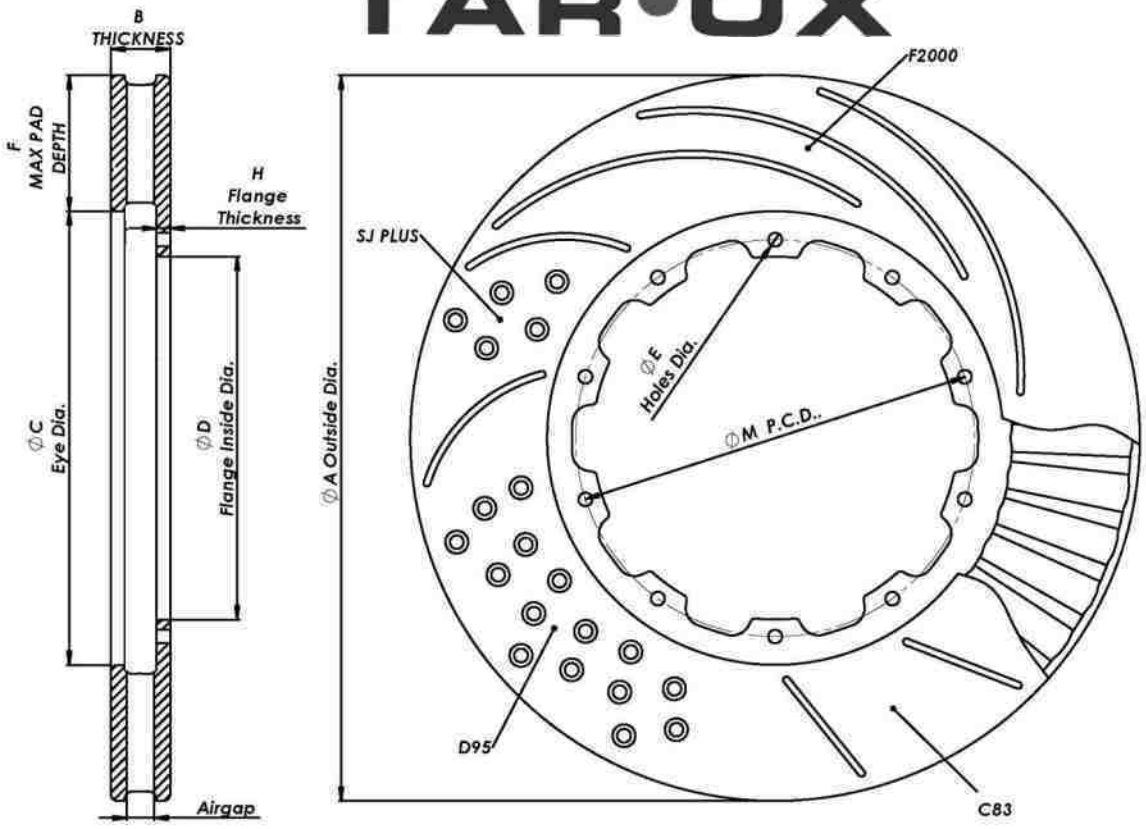

PART NUMBER	Ø 'A' Outside Diameter	'B' Th	Ø 'C' Diameter	Ø 'D' Diameter	MOUNTING HOLES				'F' Max Pad Depth	'H' Th	AIR GAP
					ØE HOLES	Ø M P.C.D.	N°	Fixing type			
C29528AX	295	28	193	164	6,4	177,8	12	Bolted	51	5,5	16
C29528BX	295	28	195,1	164,3	6,4	177,8	12	Bolted	50	6	15
C29532AX	295	32	193,4	153	6,5	177,8	10	Bolted	51	6,5	18
C30028AX	300	28	203,2	164	6,4	177,8	12	Bolted	48	5,5	16
C30421AX	304	21	195	164,3	6,4	177,8	12	Bolted	55	5,5	9
C30425AX	304	25,4	201	161	6,35	177,8	12	Bolted	52	5,5	13
C30425BX	304	25,4	203,2	164	6,4	177,8	10	Bolted	50	5	14
C30425CX	304	25,4	203,2	164	6,4	177,8	12	Bolted	50	6,5	11
C30425DX	304	25,4	203,2	164,5	6,4	177,8	12	Bolted	50	5	14
C30425EX	304	25,4	203,2	164	6,4	177,8	12	Bolted	50	5	14
C30428AX	304	28	203,2	164,3	6,4	177,8	12	Bolted	50	5,5	16
C30428CX	304	28	210,6	174	6,4	190,5	12	Bolted	47	5,5	16
C30432AX	304	32	191	164,3	6,4	177,8	12	Bolted	57	6,5	18
C31025AX	310	25,4	210	176	6,5	190,5	12	Bolted	50	5,5	13
C31028AX	310	28	210	176	6,5	190,5	12	Bolted	50	5,5	16
C31028BX	310	28	220	190	6,4	203,2	12	Bolted	45	5,5	16
C31030AX	310	30	210	163,1	6,4	177,8	12	Bolted	50	6,5	16
C31032AX	310	32	206,9	163,1	6,4	177,8	12	Bolted	52	6,5	18
C31525AX	315	25,4	220	190	6,4	203,2	12	Bolted	48	6	12
C31528AX	315	28	195,1	164,3	6,4	177,8	12	Bolted	60	6	15
C31528BX	315	28	195	164,5	6,4	177,8	12	Bolted	60	6,5	14
C31528CX	315	28	210	164,3	6,4	177,8	12	Bolted	53	6	15
C31530AX	315	30	220	190	6,4	203,2	12	Bolted	48	5,5	18
C31532AX	315	32	210	164	6,4	177,8	12	Bolted	53	6,5	18

TAROX

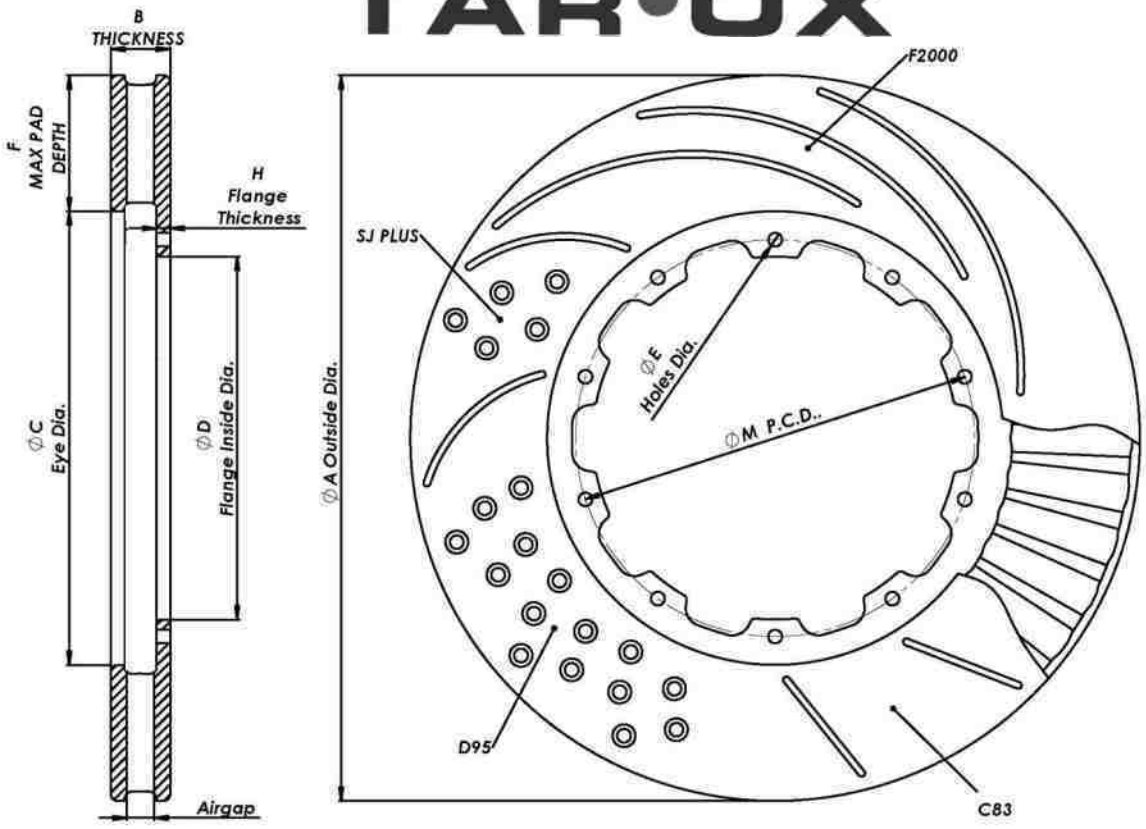

PART NUMBER	Ø 'A' Outside Diameter	'B' Th	Ø 'C' Diameter	Ø 'D' Diameter	MOUNTING HOLES				'F' Max Pad Depth	'H' Th	AIR GAP
					ØE HOLES	Ø M P.C.D.	N°	Fixing type			
C32528AX	325	28	222	187	6,4	203,2	12	Bolted	52	6,5	14
C32828AX	328	28	221,8	190	6,4	203,2	12	Bolted	53	5,5	16
C32828BX	328	28	222	190	6,4	203,2	12	Bolted	53	6,5	14
C32830AX	328	30	222	190	6,4	203,2	12	Bolted	53	6,5	16
C33025AX	330	25,4	228	196	6,4	212,0	12	Bolted	51	5,5	13
C33025BX	330	25,4	233	201,5	6,4	214,2	12	Bolted	49	5,5	13
C33028AX	330	28	220	190	6,4	203,2	12	Bolted	55	5,5	16
C33028BX	330	28	227,4	190	6,4	203,2	12	Bolted	51	5	17
C33028CX	330	28	230	190	6,4	203,2	12	Bolted	50	5,5	16
C33030AX	330	30	230	190	6,4	203,2	12	Bolted	50	5,5	18
C33032AX	330	32	220	190	6,4	203,2	12	Bolted	55	6,5	18
C33032BX	330	32	228	188	6,4	203,2	12	Bolted	51	5,5	20
C33032CX	330	32	227,4	190	6,4	203,2	12	Bolted	51	6,5	18
C33036AX	330	36	219,4	190	6,4	203,2	12	Bolted	55	6,5	22
C34328AX	343	28	240,6	212	6,4	228,6	12	Bolted	51	5,5	16
C34332AX	343	32	230	201,3	6,4	215,9	12	Bolted	57	5,5	20
C34332CX	343	32	249	208	6,4	228,6	12	Bolted	47	5,5	20
C34336AX	343	36	233	195,9	6,4	215,9	12	Bolted	55	7,5	20
C35528AX	355	28	261,6	233	6,4	247,6	12	Bolted	47	5,5	16
C35532BX	355	32	244	195	6,4	215,9	12	Bolted	56	6,5	18
C35628AX	356	28	238,6	212	6,4	228,6	12	Bolted	59	5,5	16
C35628BX	356	28	261,6	214	6,4	228,6	12	Bolted	47	5,5	16
C35628DX	356	28	252,6	220	6,4	240,0	12	Bolted	52	5	17
C35632CX	356	32	245	214	6,4	228,6	12	Bolted	56	5,5	20

TAROX

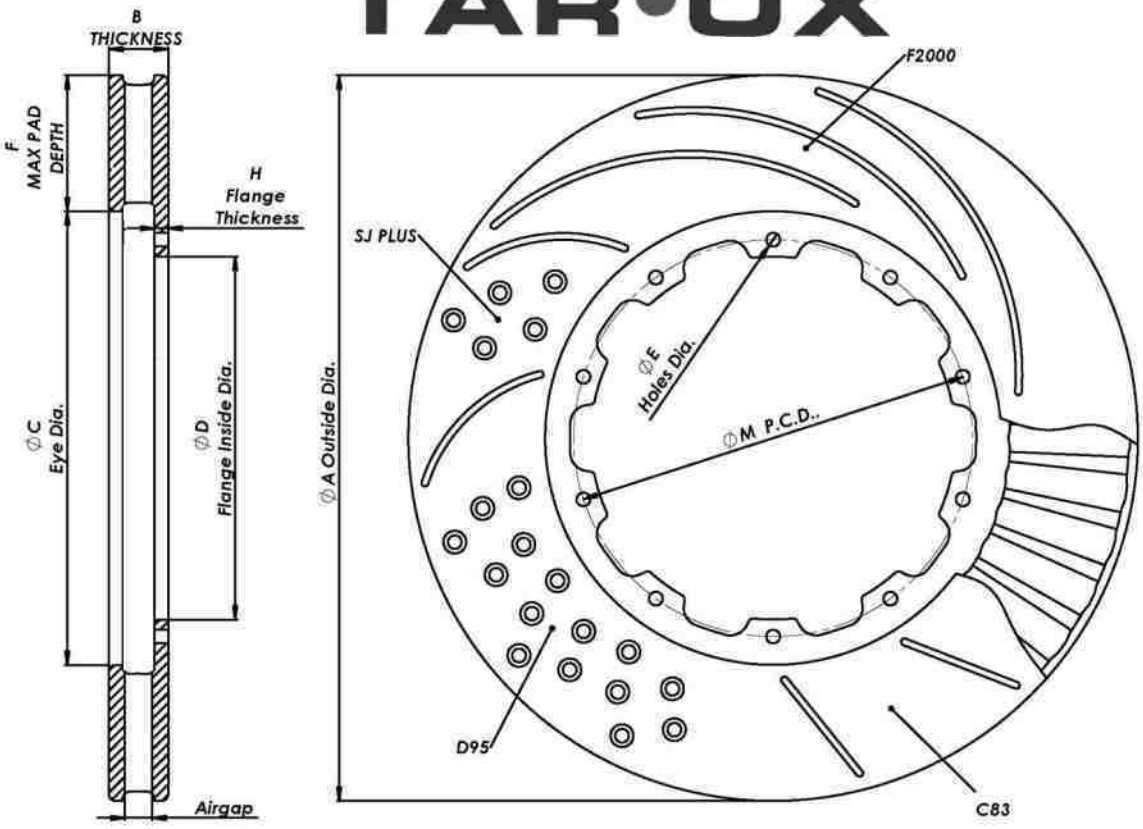

PART NUMBER	Ø 'A' Outside Diameter	'B' Th	Ø 'C' Diameter	Ø 'D' Diameter	MOUNTING HOLES				'F' Max Pad Depth	'H' Th	AIR GAP
					ØE HOLES	Ø M P.C.D.	N°	Fixing type			
C35632DX	356	32	251	214	6,4	228,6	12	Bolted	53	5	21
C35632EX	356	32	251,6	202,6	6,4	228,6	12	Bolted	52	5,5	20
C35632FX	356	32	261,6	225,5	6,4	240,0	12	Bolted	47	5,5	20
C35632LX	356	32	261,6	215	9,5	240,0	12	Floating	47	5	21
C35636AX	356	36	244,6	214	6,4	228,6	12	Bolted	56	6,5	22
C35636BX	356	36	245	208	6,4	228,6	12	Bolted	56	6,5	22
C35636CX	356	36	244,6	202,8	6,4	228,6	12	Bolted	56	5,5	24
C36232AX	362	32	238	195	6,4	215,9	12	Bolted	62	6,5	18
C36232BX	362	32	251,4	208	6,4	228,6	12	Bolted	55	6,5	18
C37036AX	370	36	252	224	6,4	241,3	12	Bolted	59	6	23
C37536AX	375	36	257	225	6,4	241,3	12	Bolted	59	6,5	22
C37536BX	375	36	257	231	6,4	247,6	12	Bolted	59	6,5	22
C37536CX	375	36	269,7	245	6,4	260,4	12	Bolted	53	6,5	22
C37832AX	378	32	250	218	8,4	235,8	10	Bolted	64	7	17
C37832BX	378	32	250	220	8,4	235,8	10	Bolted	64	7	17
C37832DX	378	32	268	215	6,4	240,0	12	Bolted	55	5,5	20
C39032AX	390	32	268,8	243	6,4	260,0	12	Bolted	61	6	19
C39036AX	390	36	268,8	243	6,4	260,0	12	Bolted	61	6,5	22
C40032AX	400	32	280	239	6,4	266,0	12	Bolted	60	6,5	18

TAROX

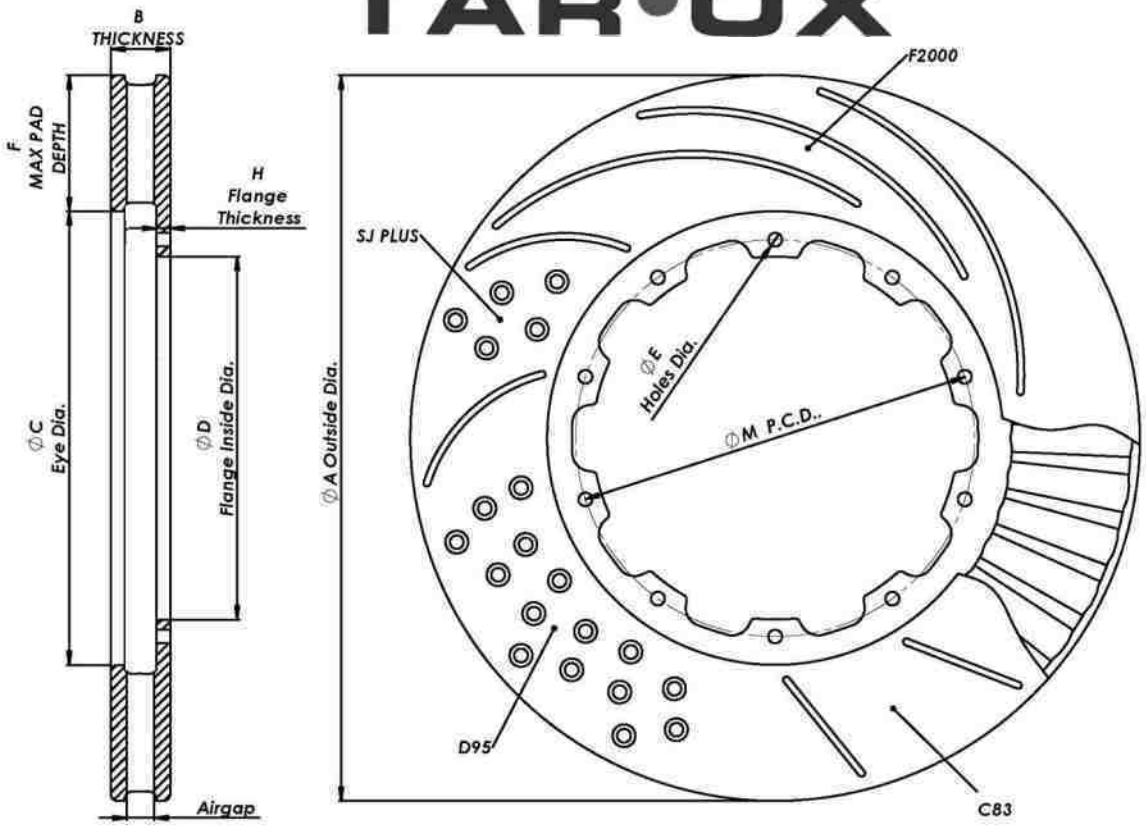

PART NUMBER	Ø 'A' Outside Diameter	'B' Th	Ø 'C' Diameter	Ø 'D' Diameter	MOUNTING HOLES				'F' Max Pad Depth	'H' Th	AIR GAP
					ØE HOLES	Ø M P.C.D.	N°	Fixing type			
C27816BX	278	16	198	158	9,5	181,5	8	Floating	40	4,5	6
C28017AX	280	17	191,4	146,5	9,5	171,4	8	Floating	44	5	7
C28020AX	280	20	192	154	9,5	176,8	8	Floating	44	5	9
C28025CX	280	25,4	192	154	9,5	176,8	8	Floating	44	5	14
C29528CX	295	28	192,4	154	9,5	177,8	12	Floating	51	5,5	16
C29532BX	295	32	193,4	153	9,5	177,8	10	Floating	51	6,5	18
C30428BX	304	28	203,2	152,6	9,5	177,8	12	Floating	50	5,5	16
C32530AX	325	30	218	174	9,5	198,0	10	Floating	54	6,5	16
C32532AX	325	32	218	174	9,5	198,0	10	Floating	54	6,5	18
C32536AX	325	36	218	174	9,5	198,0	10	Floating	54	6,5	22
C32832AX	328	32	233	192	9,5	218,0	8	Floating	48	6,5	18
C32836AX	328	36	200,9	160	9,5	184,2	10	Floating	64	6,5	22
C32842AX	328	42	200,9	160	9,5	184,1	10	Floating	64	6,5	28
C33032DX	330	32	227	178	9,5	203,2	12	Floating	52	5,5	20
C33032EX	330	32	226	179	9,5	203,2	12	Floating	52	5,5	20
C34328BX	343	28	246	208	9,5	228,6	12	Floating	49	5,5	16
C34332BX	343	32	236	190,5	9,5	215,9	12	Floating	54	5,5	20
C35532AX	355	32	248	217	9,5	233,0	10	Floating	54	8	15
C35628CX	356	28	251,6	202,6	9,5	228,6	12	Floating	52	5	17
C35632AX	356	32	248	192,1	9,5	217,6	12	Floating	54	5,5	20
C35632BX	356	32	244,6	202,8	9,5	228,6	12	Floating	56	5,5	20
C35632GX	356	32	258	215	9,5	240,0	12	Floating	49	5	21
C35632HX	356	32	258,6	215	9,5	240,0	12	Floating	49	5,5	20
C35632IX	356	32	261,6	215	9,5	240,0	12	Floating	47	5	21

TAROX

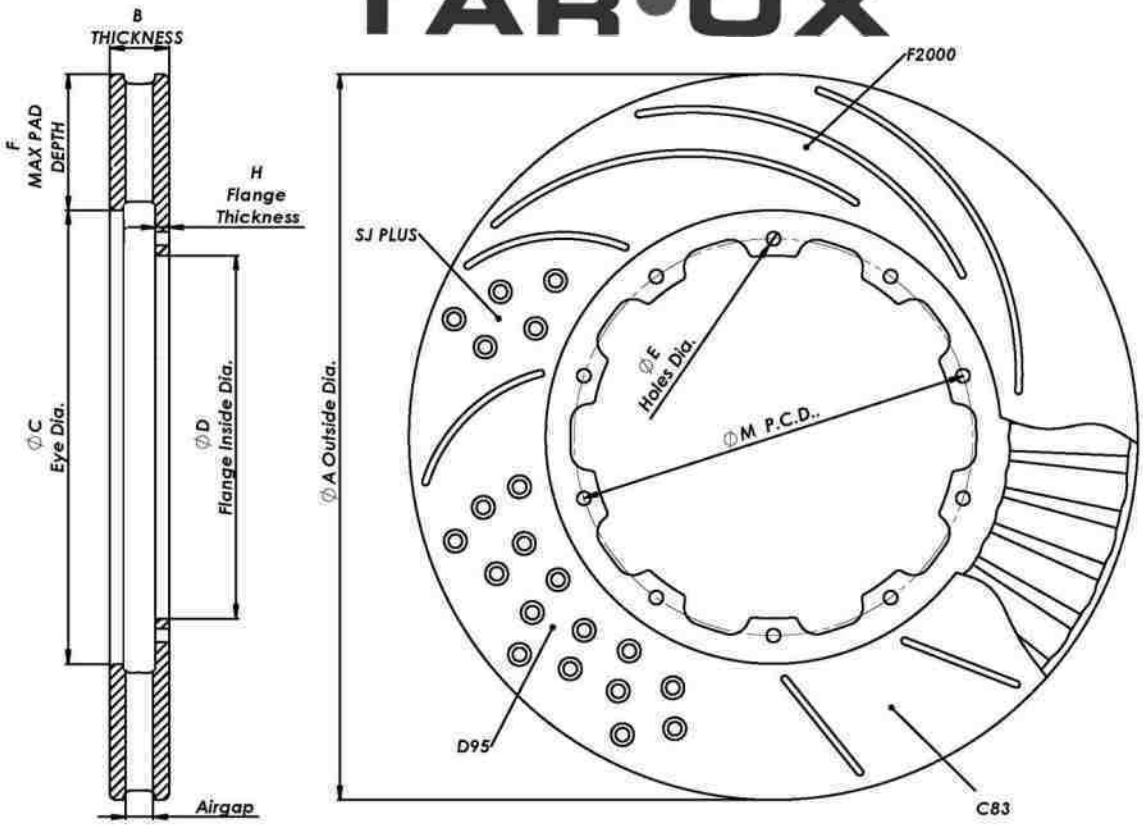

PART NUMBER	Ø 'A' Outside Diameter	'B' Th	Ø 'C' Diameter	Ø 'D' Diameter	MOUNTING HOLES				'F' Max Pad Depth	'H' Th	AIR GAP
					ØE HOLES	Ø M P.C.D.	N°	Fixing type			
C35632LX	356	32	261,6	215	9,5	240,0	12	Floating	47	5	21
C35636DX	356	36	244,6	202,8	9,5	228,6	12	Floating	56	5,5	24
C35636EX	356	36	251,6	202,6	9,5	228,6	12	Floating	52	6	23
C36034AX	360	34	227,2	182,6	9,5	208,0	10	Floating	66	5,5	22
C37535AX	375	35	261	221	9,5	245,0	10	Floating	57	8	18
C37832CX	378	32	266,8	215	9,5	240,0	12	Floating	56	5,5	20
C37832EX	378	32	268	215	9,5	240,0	12	Floating	55	5	21
C37832FX	378	32	282	235,4	9,5	260,4	12	Floating	48	5,5	20
C37836AX	378	36	264	216	9,5	240,0	12	Floating	57	5	25
C37836BX	378	36	275	234,5	9,5	258,0	10	Floating	52	8	19
C38036AX	380	36	270	215	9,5	240,0	12	Floating	55	5,5	24
C38040AX	380	40	266	216	9,5	240,0	12	Floating	57	5,5	28
C40032BX	400	32	280	239	9,5	266,0	12	Floating	60	6,5	18
C40036AX	400	36	280	239	9,5	266,0	12	Floating	60	6,5	22
C40036BX	400	36	300	259	9,5	286,0	12	Floating	50	6,5	22

TAROX

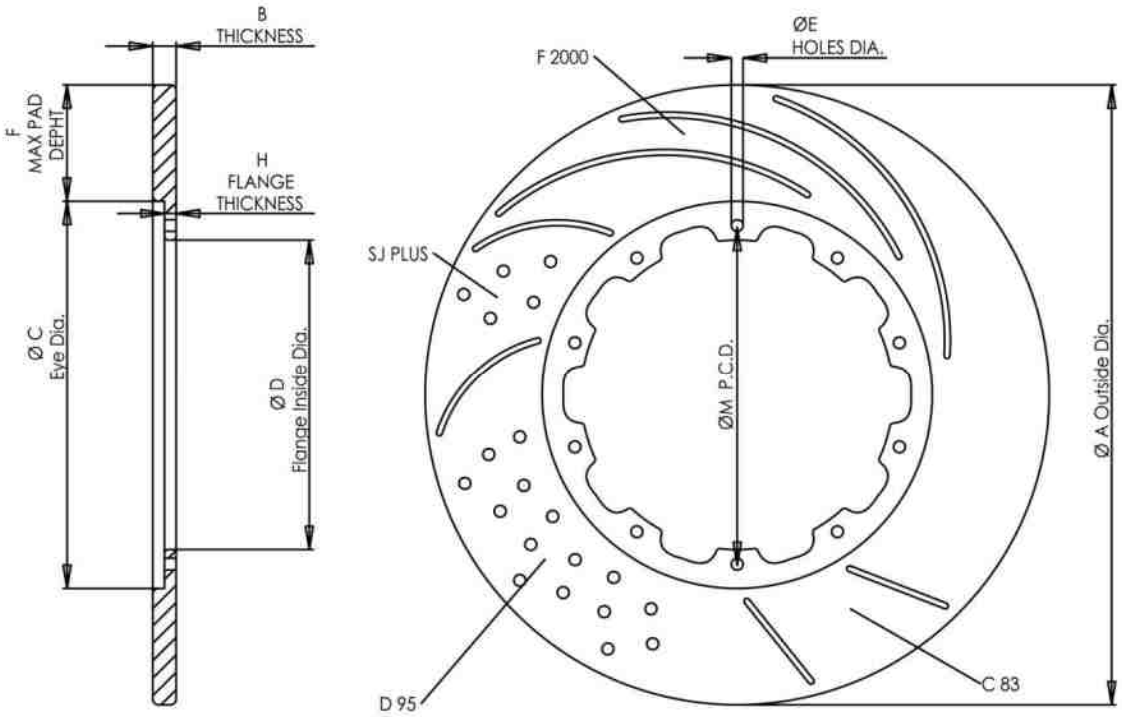

PART NUMBER	Ø 'A' Outside Diameter	'B' Th	Ø 'C' Diameter	Ø 'D' Diameter	MOUNTING HOLES				'F' Max Pad Depth	'H' Th
					ØE HOLES	Ø M P.C.D.	N°	Fixing type		
C2488AX	248	8	172	134	6,4	151	8	Bolted	38	5
C2548AX	254	8	165	131	8,45	146	6	Bolted	45	5
C2548BX	254	8	165	131	6,4	146	8	Bolted	45	5
C25410AX	254	10	166	134	6,4	151	8	Bolted	44	6
C25410BX	254	10	166	131	8,5	146	8	Bolted	44	6
C26010AX	260	10	173	123,2	7,95	139,7	6	Bolted	44	6
C2658AX	265	8	177	141	6,4	158,8	8	Bolted	44	5
C26510AX	265	10	189	141	6,4	158,8	8	Bolted	38	6
C26510BX	265	10	177	141	6,4	158,8	8	Bolted	44	5
C26510CX	265	10	177	135,7	/	158,8	8	Floating	44	5
C27710AX	277	10	192	159	6,4	176,8	8	Bolted	43	6
C27710BX	277	10	192	154	/	176,8	8	Floating	43	4,8
C27710CX	277	10	197,5	159,3	/	181,5	8	Floating	40	4,8
C28010AX	280	10	192	149,3	/	169,8	8	Floating	44	4,8
C28010BX	280	10	191,5	158	6,4	175	8	Bolted	44	6
C28010CX	280	10	192	159	6,4	176,8	8	Bolted	44	6
C28010DX	280	10	192	159	8,5	176,8	6	Bolted	44	6
C28010EX	280	10	206	176	6,4	190	8	Bolted	37	6
C28010FX	280	10	206	173	/	190	8	Floating	37	4,8
C29510AX	295	10	192	159	6,4	176,8	8	Bolted	52	6
C30010AX	300	10	206,5	171	6,4	189	8	Bolted	47	6
C30410AX	304	10	216	186,5	6,4	200	10	Bolted	44	6
C30410BX	304	10	216	173	/	200,0	10	Floating	44	4,8

TAROX

CUSTOM VENTILATED BRAKE DISC

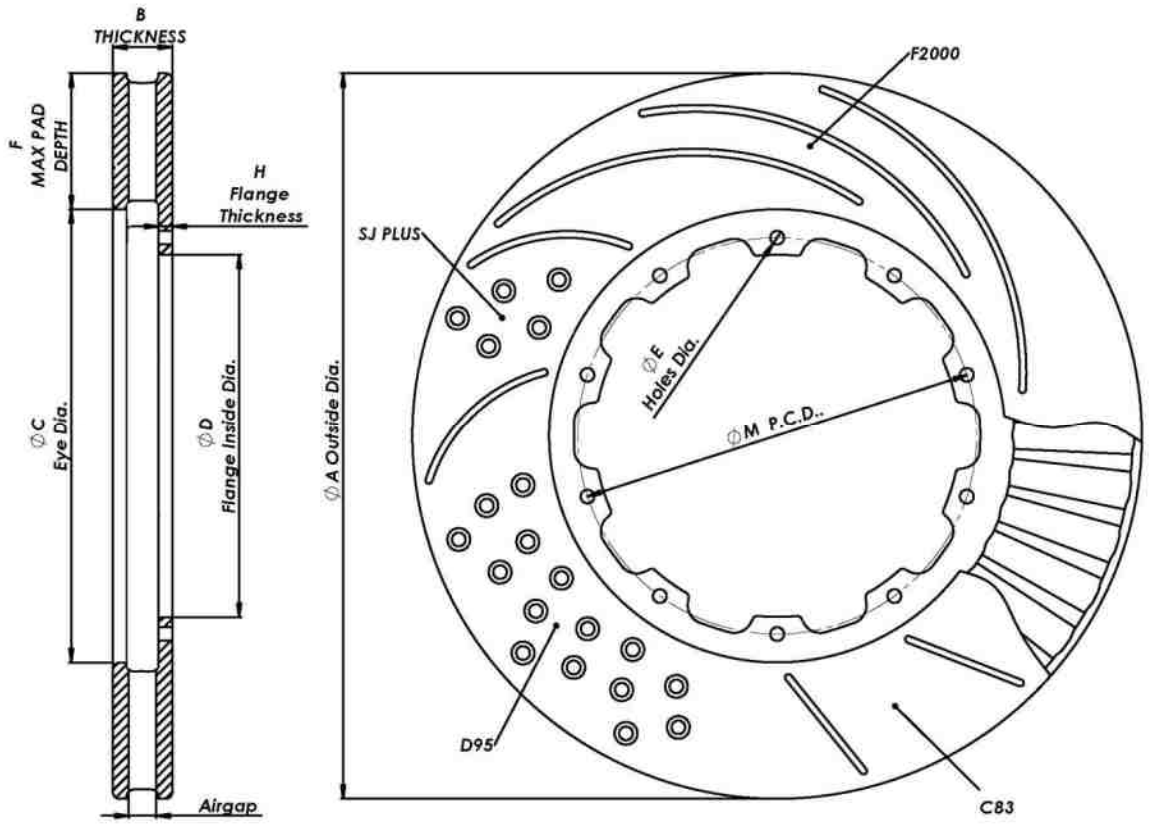

INCH OR METRIC DIMENSIONS	Ø 'A' Outside Dia	'B' TH	Ø 'C' Dia.	Ø 'D' Dia.	MOUNTING HOLES				'F' Max Pad Depth	'H' TH	AIR GAP
					ØE HOLES	Ø M P.C.D.	N°	Fixing type			

Face TypesAvailable	NUMBER OF DISCS NEEDED:
……..	n° ……...

COMMENTS:
……
……

Application
…… …… ……..

Front	
Rear	

COPY THIS PAGE TO SEND TO:

Fax: +39- 039 - 58 76 52

E-mail: sales@tarox.com

ADDRESS	
NAME	……
LAST NAME	……
STREET	……
CITY	……
STATE	……
ZIP CODE	……
PHONE	……
MOBILE PHONE	……
FAX	……
E-MAIL	……

TAROX

CUSTOM SOLID BRAKE DISC

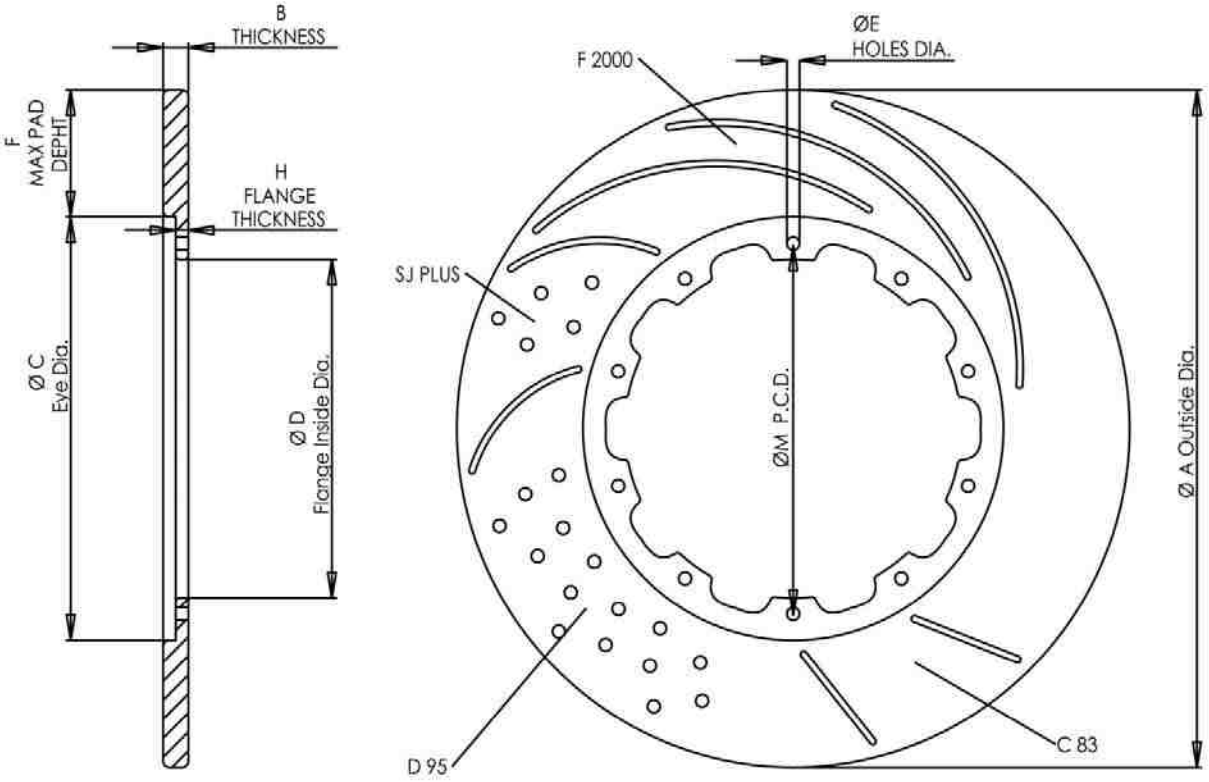

INCH OR METRIC DIMENSIONS	Ø 'A' Outside Diameter	'B' TH	Ø 'C' Diameter	Ø 'D' Diameter	MOUNTING HOLES				'F' Max Pad Depth	'H' TH
					ØE HOLES	Ø M P.C.D.	N°	Fixing type		

Face TypesAvailable	NUMBER OF DISCS NEEDED:
……	n° ……..

COMMENTS:
……
……

Application		
……		
……		
……..		
	Front	
	Rear	

COPY THIS PAGE TO SEND TO:
Fax: +39- 039 - 58 76 52
E-mail: sales@tarox.com

ADDRESS	
NAME	……
LAST NAME	……
STREET	……
CITY	……
STATE	……
ZIP CODE	……
PHONE	……
MOBILE PHONE	……
FAX	……
E-MAIL	……

CALIPERS

2. Racing Calipers

TAROX have developed several racing calipers which can provide the answer to virtually every racing application. In order to help you to choose the most appropriate calipers there are a few factors that should be considered.

Right caliper for the right disc
For each caliper we can provide different gaps therefore when ordering a caliper it is essential to advise the brake disc thickness so that TAROX can provide a caliper with the appropriate gap.

Some TAROX calipers work for discs of different brake surface width (usually 50 mm and 60 mm). When choosing the right disc and caliper combination it is essential to take into account this factor to achieve the best possible braking performance.

Piston Number

In principle the more the better, so choose six instead of four and ten instead of six unless the relevant Technical Regulations dictate a limit in the calipers number of pistons. More pistons mean:
1. Pressure is more evenly distributed across the pads.
2. Better cooling action of the pads, because of more airflow behind the pad's metal support.
3. Less stress factors on the caliper itself.
4. More responsive brake pedal.

Caliper Mounting and Handing

It is essential that calipers are always mounted
a) with the bleeding nipples ALWAYS on the top, and
b) with the external rigid connecting hoses ALWAYS at the bottom
When ordering the calipers is essential to specify whether the caliper will be mounted in front of the axle (Leading) or behind the Axle (Trailing) as shown in the picture

Piston Size

For each TAROX racing calliper we may offer different piston sizes. If you are in any doubt as to the most suitable piston size for your application our technical department will be happy to advise the best and most efficient solution for your car based on the size of the master cylinder.

Servo Brake

If allowed by the relevant Technical Rules, we recommend to keep the Servo as TAROX calipers are at there best when used with a servo. If a servo is not an option please take into consideration that much more effort is required to brake.

Servicing TAROX Brake Calipers

TAROX calipers are designed to work without any particular service in its internal parts- mainly pistons and o-rings - As a result no repair kits and/or spares are available with the exclusion of bleed nipples, banjo bolts, retaining pins and the external rigid connecting pipe. Calipers that need rebuilding should to be returned to TAROX who will carry out the necessary service.

Caliper Colour

All TAROX racing calipers come with light grey hard (approximately 450 Wickers) anodising for maximum life.

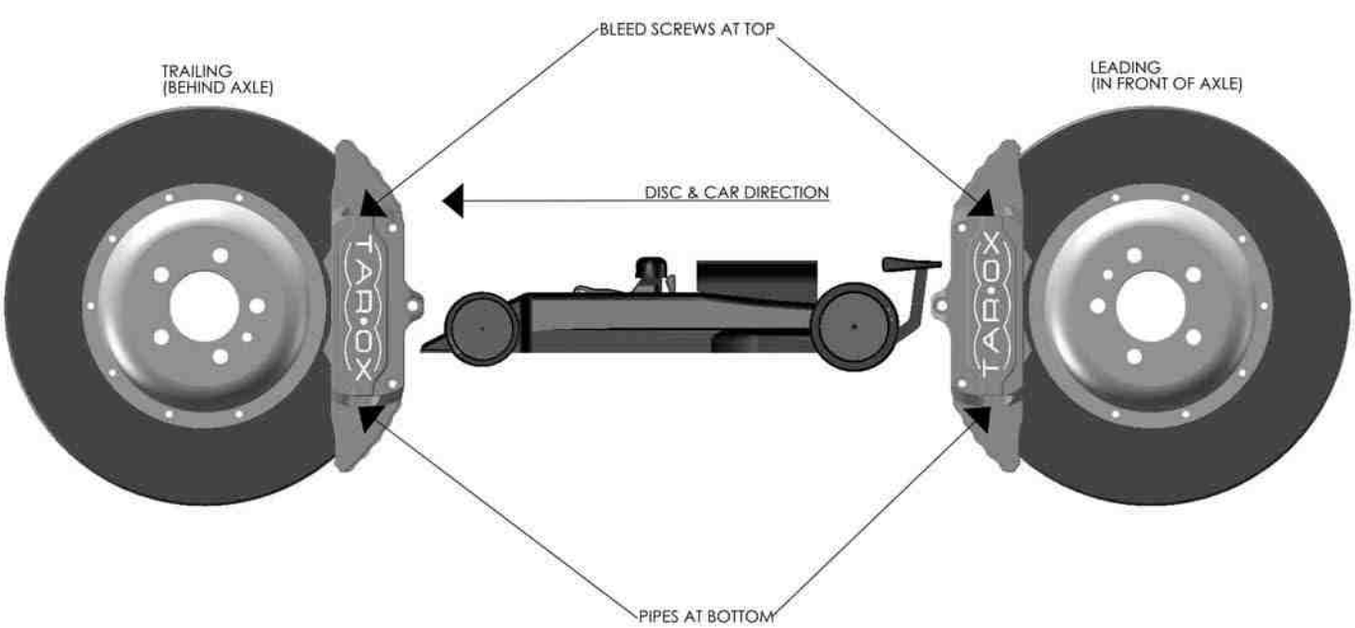

Caliper available and suggested applications

FMR

Compact light weight two piston caliper made from solid alloy billet, ideal for hydraulic hand brakes or very light, open-wheel racing cars on tarmac whose power does not exceed 150HP.

Code for replacement pads: **SP0097**
Weight without brake pads: **Kg 1.25**

B20 FTL-4

Extremely compact four piston caliper made from solid alloy billet, most suitable for racing cars whose disc diameter do not exceed 230 mm of diameter, power does not exceed 90HP, weight does not exceed 700 kg. It can be bolted directly on to disc brake classic Mini's without adapting brackets.
Code for replacement pads: **SP0020**
Weight without brake pads: **Kg 0.80**

B25 S-6

Light weight six pot caliper made from solid alloy billet, suitable for racing and rally cars whose discs do not exceed 250 mm of diameter, and weight does not exceed 900 kg. Also used for smaller fast road brake conversion kits.
Code for replacement pads: **SP0153M**
Weight without brake pads: **Kg. 0.95**

B27-6

Light weight six piston caliper made from solid alloy billet, suitable for racing and rally cars whose discs do not exceed 270 mm in diameter, and weight does not exceed 1050 kg. Also used for fast road brake conversion kits.
Code for replacement pads: **SP0153M**
Weight without brake pads: **Kg. 1.50**

B27-6 Radial

Radial mounted version of B27-6 caliper.
Code for replacement pads: **SP0153M**
Weight without brake pads: **Kg. 1.35**

B280-4

Very rigid four piston caliper made from solid alloy billet, suitable for racing cars whose discs do not exceed 280 mm in diameter and weight does not exceed 1050 kg and the relevant Technical Rules limit the maximum number of pistons in each caliper to 4. Suitable for 50 mm wide brake surfaces.
Code for replacement pads: **SP0102**
Weight without brake pads: **Kg. 1.9**

B280-6

Light weight six pot caliper made from solid alloy billet, suitable for racing cars whose disc do not exceed 280 mm of diameter, power does not exceed 200HP and weight does not exceed 1050 kg. Suitable for 50 mm wide brake surfaces. Also used for some fast road brake conversion kits.
Code for replacement pads: **SP0102**
Weight without brake pads: **Kg. 1.8**

BF30-6

Light weight six piston caliper made from solid alloy billet, Ideal for rear applications where the discs do not exceed 300 mm in diameter.
Recommended for Sprint racing and Rally
Code for replacement pads: **SP2703M**
Weight without brake pads: **Kg. 1.45**

BF34-6

Light weight six piston caliper made from solid alloy billet, Ideal for rear applications where the discs do not exceed 340 mm in diameter.
Also used for some TAROX rear fast road brake conversion kits.
Code for replacement pads: **SP2703M**
Weight without brake pads: **Kg. 1.5**

B320-6

Radial mounted six piston caliper made from solid alloy billet, suitable for those racing cars whose discs do not exceed 320 mm in diameter and the relevant Technical Rules limit the maximum number of pistons in each caliper to 6. Suitable for racing discs whose brake surface is 50 mm wide.
Code for replacement pads: **SP0102**
Weight without brake pads: **Kg. 1.9**

B32-6

Light weight six piston caliper made from solid alloy billet, suitable for those racing cars whose discs do not exceed 330 mm in diameter and the relevant Technical Rules limit the maximum number of pistons in each caliper to 6. Suitable for racing discs whose brake surface is 60 mm wide. Also used for most of our fast road brake conversion kits.
Code for replacement pads: **SP0239**
Weight without brake pads: **Kg. 2.2**

B32-10

Light weight ten piston caliper made from solid alloy billet, suitable for those racing cars whose discs do not exceed 330 mm in diameter. Suitable for racing discs whose brake surface is 60 mm. Also used for most of our fast road brake conversion kits.
Code for replacement pads: **SP0239**
Weight without brake pads: **Kg. 2.15**

B32-10GT

High rigidity light weight ten piston caliper made from solid alloy billet, specifically designed for sprint races. Suitable for those racing cars whose discs do not exceed 330 mm in diameter and the relevant Technical Rules do not limit the maximum number of pistons in each caliper.
It is suitable for racing discs whose brake surface is 60 mm wide.
Not suitable for road use.
Code for replacement pads: **SP0899**
Weight without brake pads: **Kg. 2.65**

B34-VC6

Incredibly tough 6 piston caliper made from solid alloy billet, Ideal for heavy duty racing like endurance due to it's reinforced structure. Suitable for those racing cars whose discs do not exceed 355 mm in diameter. Suitable for racing discs whose brake surface is 60 mm wide.
Code for replacement pads: **SP0239**
Weight without brake pads: **Kg. 2.75**

B34-GT10

Proven world over 10 piston GT caliper made from solid alloy billet, suitable for those racing cars of any power, whose discs do not exceed 355 mm in diameter and the relevant Technical Rules do not limit the maximum number of pistons in each caliper.
Suitable for racing discs whose brake surface is 60 mm wide. Also used for most of our fast road brake conversion kits.
Code for replacement pads: **SP0239**
Weight without brake pads: **Kg. 2.35**

B350-8

Advanced design means this extremely light weight 8 piston caliper made from solid alloy billet can save Kg's of un sprung weight as it 'wraps' its self around discs allowing a thinner width of disc and a larger alloy bell, suitable for those racing cars whose discs do not exceed 360 mm in diameter and the relevant Technical Rules do not limit the maximum number of pistons in each caliper. This caliper hosts 4 pads instead of the traditional 2 to minimise uneven wear problems even under the most intense use.
Suitable for racing discs whose brake surface is 50 mm wide.
Code for replacement pads: **SP0225**
Weight without brake pads: **Kg. 3.1**

B350-12

Advanced design means this extremely light weight 12 piston caliper made from solid alloy billet can save Kg's of un sprung weight as it 'wraps' its self around discs allowing a thinner width of disc and a larger alloy bell, suitable for racing cars whose discs do not exceed 360 mm of diameter and the relevant Technical Rules do not limit the maximum number of pistons in each caliper. This caliper hosts 4 pads instead of the traditional 2 to minimise uneven wear problems even under the most intense use. Suitable for racing discs whose brake surface is 50 mm wide. Also used for most of TAROX high-profile fast road brake conversion kits.
Code for replacement pads: **SP0225**
Weight without brake pads: **Kg. 2.95**

B400-12

Advanced design means this extremely light weight 12 piston caliper made from solid alloy billet can save Kg's of un sprung weight as it 'wraps' its self around discs allowing a thinner width of disc and a larger alloy bell, suitable for those racing cars with discs up to 400 mm in diameter and the relevant Technical Rules do not limit the maximum number of pistons in each caliper. This caliper hosts 4 pads instead of the traditional 2 to minimise uneven wear problems even under the most intense use.
Suitable for racing discs whose brake surface is 50 mm wide. Also used for TAROX high-profile fast road brake conversion kits.
Code for replacement pads: **SP0225**
Weight without brake pads: **Kg. 3.6**

B400-GT16

Advanced design means this massive 16 piston caliper made from solid alloy billet can bring a stop to some of the worlds heaviest and most powerful race and road cars while still keeping a firm and progressive pedal feel while not increasing un sprung weight due to its impressive lightness for such a large caliper, suitable for disc up to 400 mm in diameter and the relevant Technical Rules do not limit the maximum number of pistons in each caliper. This caliper hosts 4 pads instead of the traditional 2 to minimise uneven wear problems even under the most intense use.
Suitable for racing discs whose brake surface is 55 mm wide. Also used for our fast road brake conversion kits.
Code for replacement pads: **SP0331**
Weight without brake pads: **Kg. 5.3**

FMR

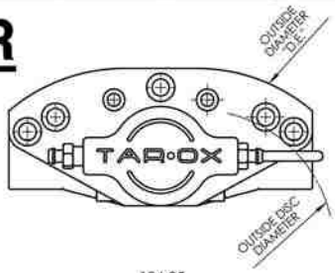

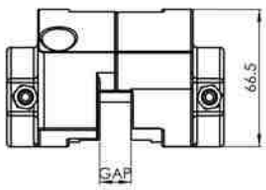

DISC THICK=GAP-3mm.

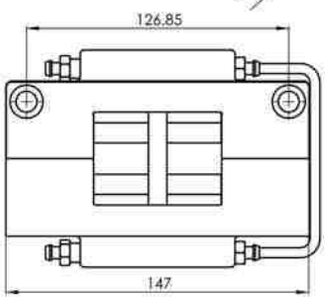

DIMENSIONS

CODE	DISC Dia		D.E.	GAP		PISTONS	
	min	max		min	max	Q.ty	Dia.
FMR	225	250	268,5	11	26	2	40
FMR	225	250	268,5	11	26	2	34
FMR	225	250	268,5	11	26	2	31

Questo disegno è proprietà della TARO-OX R.C.E. s.r.l. e non può essere riprodotto, ceduto a terzi, ceduto o comunque usato AUTORIZZAZIONE SCRITTA

Signature: O.R.	Date: 18-10-02	
Material: AL		Description: RACING CARS'S CALIPERS
Code:		TAR•OX ENGINEERING
Treating:	Scale: 1:1	Drawing Number: FMR

B20

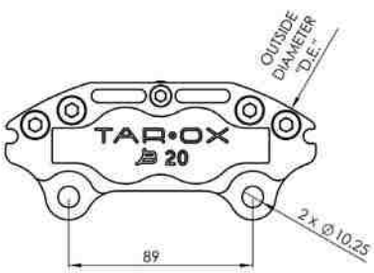

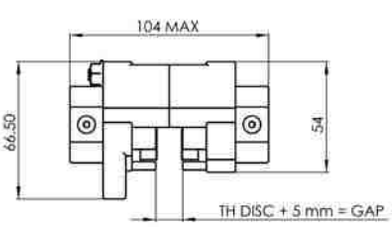

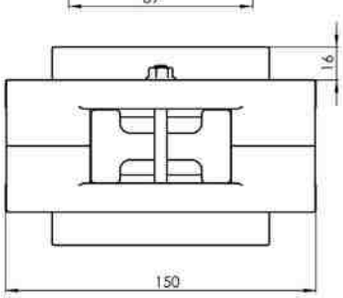

CODE	DISC Dia		D.E.	GAP		PISTONS		
	min	max		min	max	Q.ty	Dia.	Dia.
B-20	190	210	284	13	27	4	31	31

Questo disegno è proprietà della TARO-OX R.C.E. s.r.l. e non può essere riprodotto, ceduto a terzi, ceduto o comunque usato AUTORIZZAZIONE SCRITTA

Signature: O.R.	Date: 18-10-02	
Material: AL		Description: RACING CARS'S CALIPERS
Code:		TAR•OX ENGINEERING
Treating:	Scale: 1:1	Drawing Number: B-20-4

B25S-6

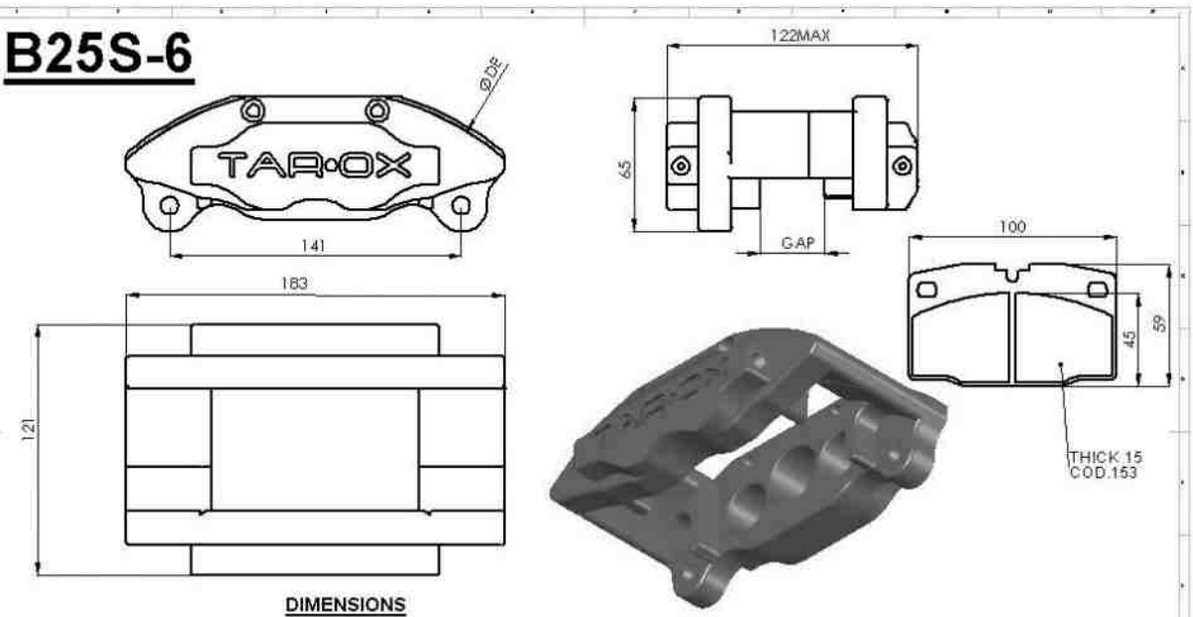

DIMENSIONS

CODE	DISC Dia		D.E.	GAP		PISTONS			
	min	max		min	max	Q.ty	Dia.	Dia.	Dia.
B25-S-6	230	250	285	13	35	6	31	34	31
B25-S-6	230	250	285	13	35	6	26	31	26

Signature: O.F. Date: 10-10-02 Material: AL Code: Treating: Scale: 1:1 Description: RACING CARS'S CALIPERS TAR·OX ENGINEERING Drawing number: B25S-6

B27-6

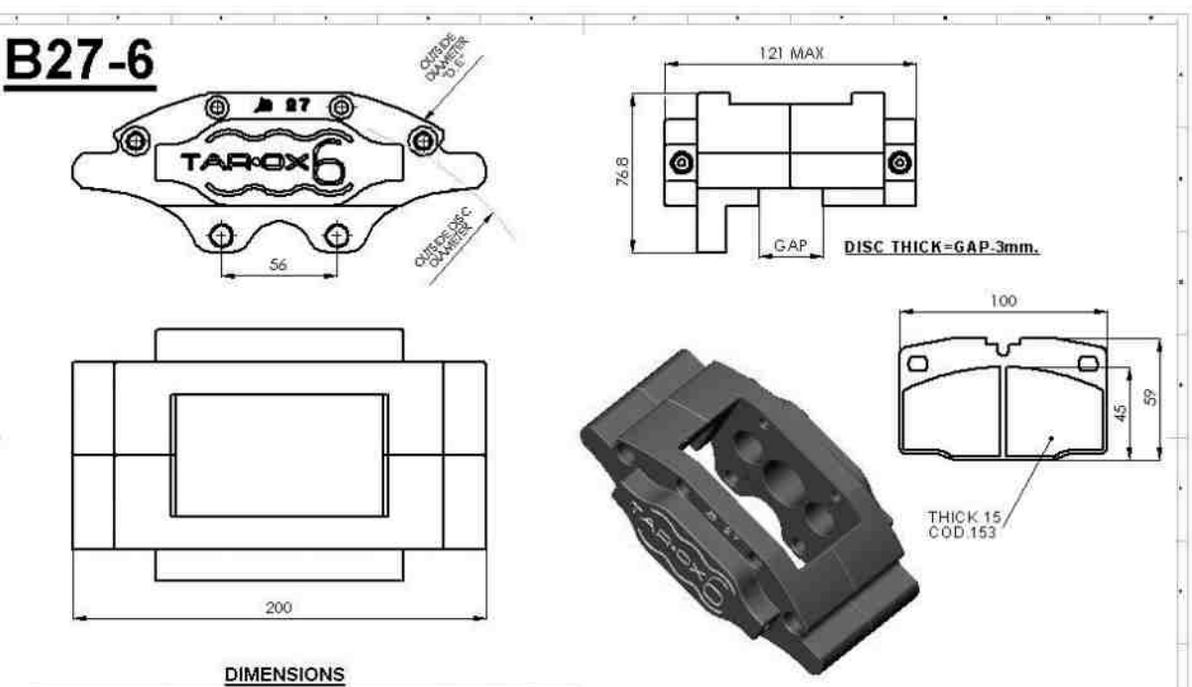

DIMENSIONS

CODE	DISC Dia		D.E.	GAP		PISTONS			
	min	max		min	max	Q.ty	Dia.	Dia.	Dia.
B27-6	260	276	308	13	35	6	31	34	31
B27-6	260	276	308	13	35	6	26	31	26

Signature: O.F. Date: 10-10-02 Material: AL Code: Treating: Scale: 1:1 Description: RACING CARS'S CALIPERS TAR·OX ENGINEERING Drawing number: B27-6

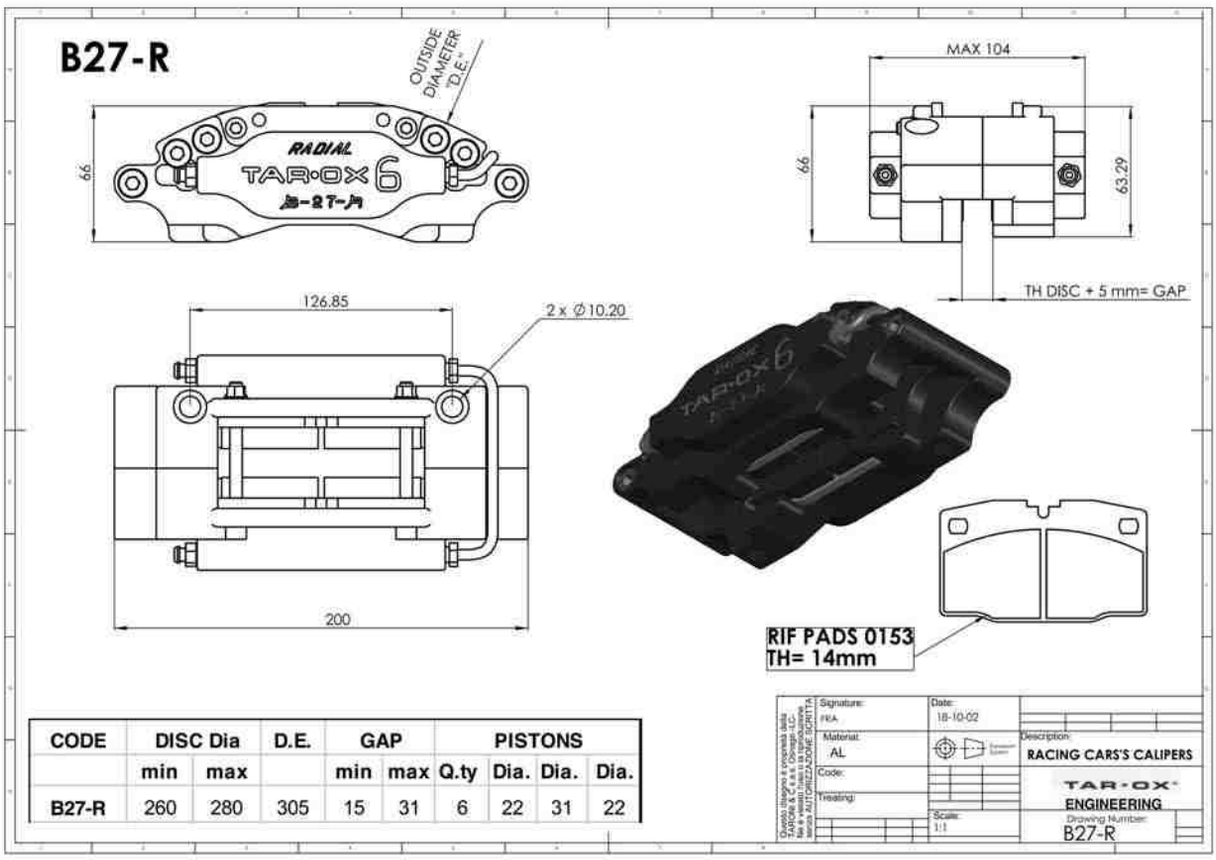

CODE	DISC Dia		D.E.	GAP		PISTONS			
	min	max		min	max	Q.ty	Dia.	Dia.	Dia.
B27-R	260	280	305	15	31	6	22	31	22

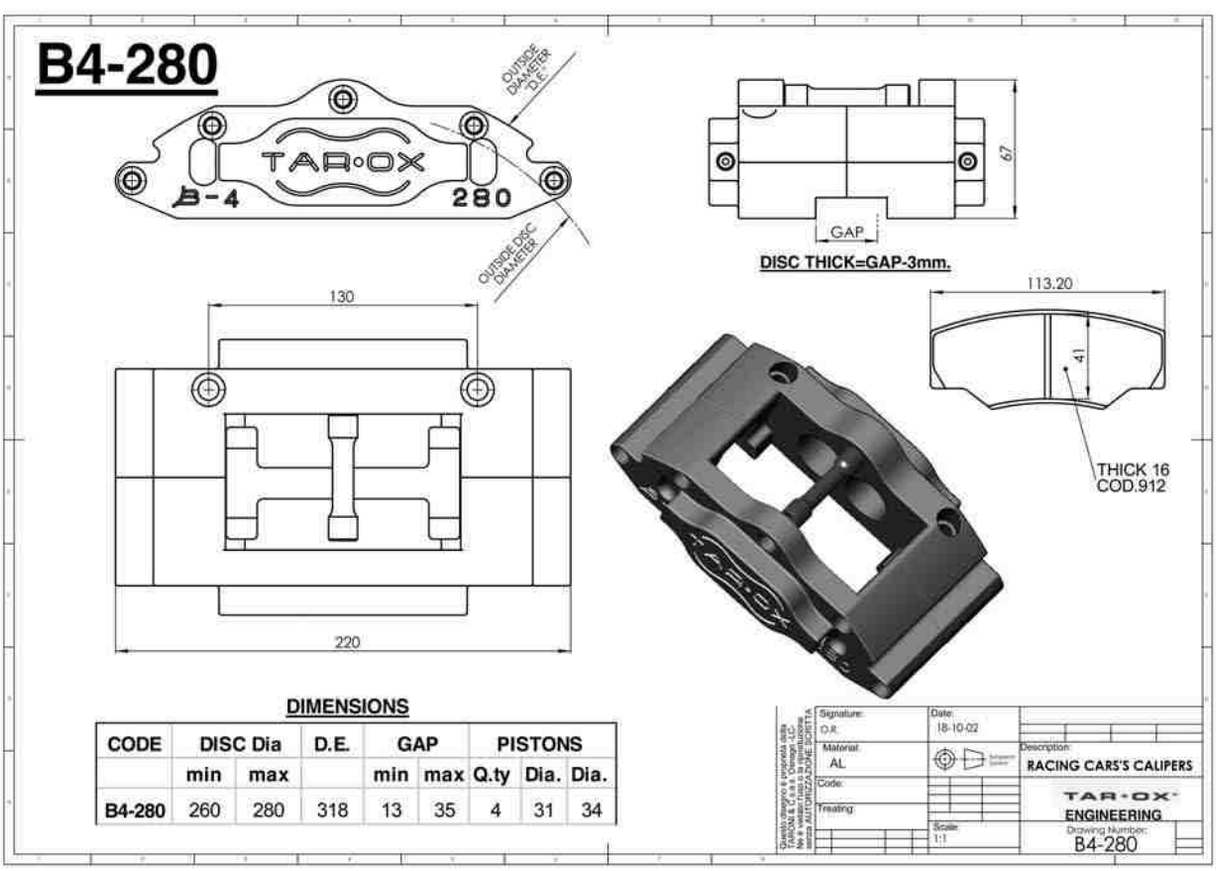

DIMENSIONS

CODE	DISC Dia		D.E.	GAP		PISTONS		
	min	max		min	max	Q.ty	Dia.	Dia.
B4-280	260	280	318	13	35	4	31	34

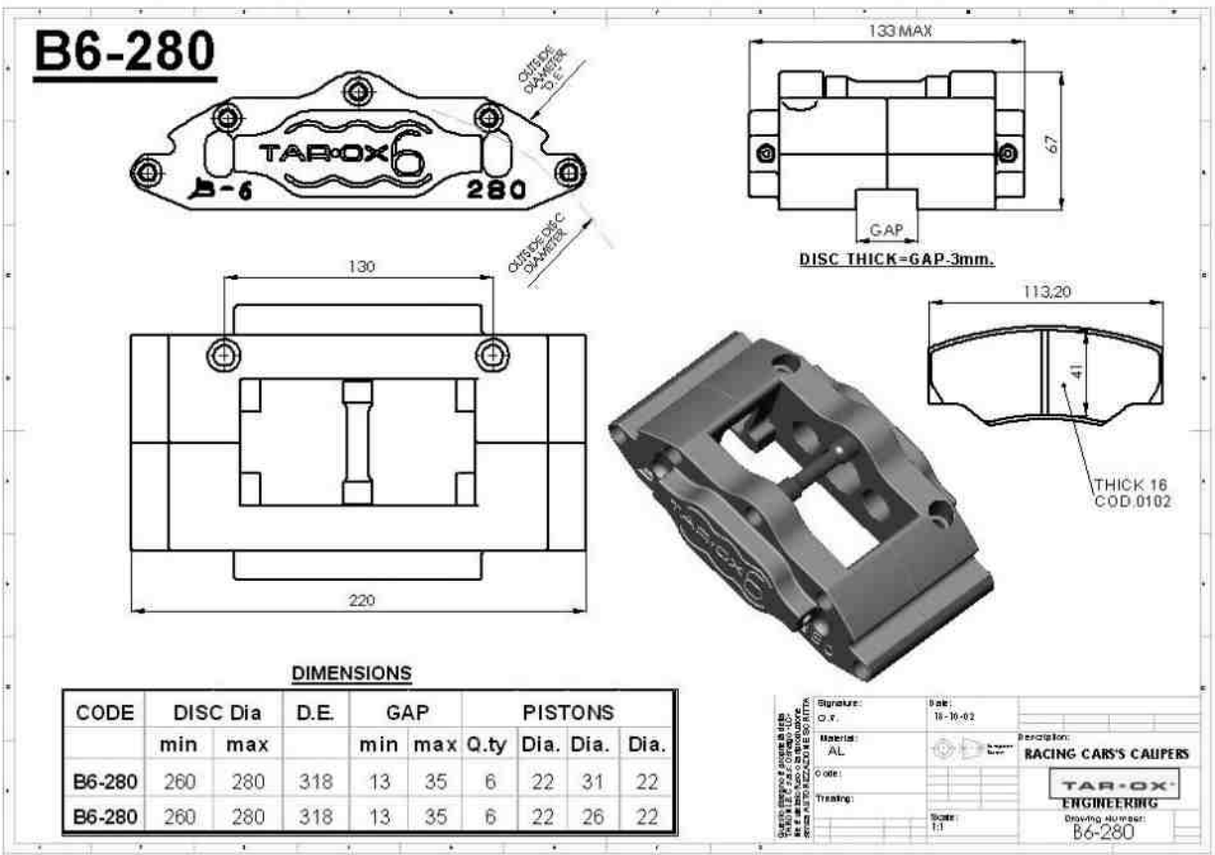

DIMENSIONS

CODE	DISC Dia		D.E.	GAP		PISTONS			
	min	max		min	max	Q.ty	Dia.	Dia.	Dia.
B6-280	260	280	318	13	35	6	22	31	22
B6-280	260	280	318	13	35	6	22	26	22

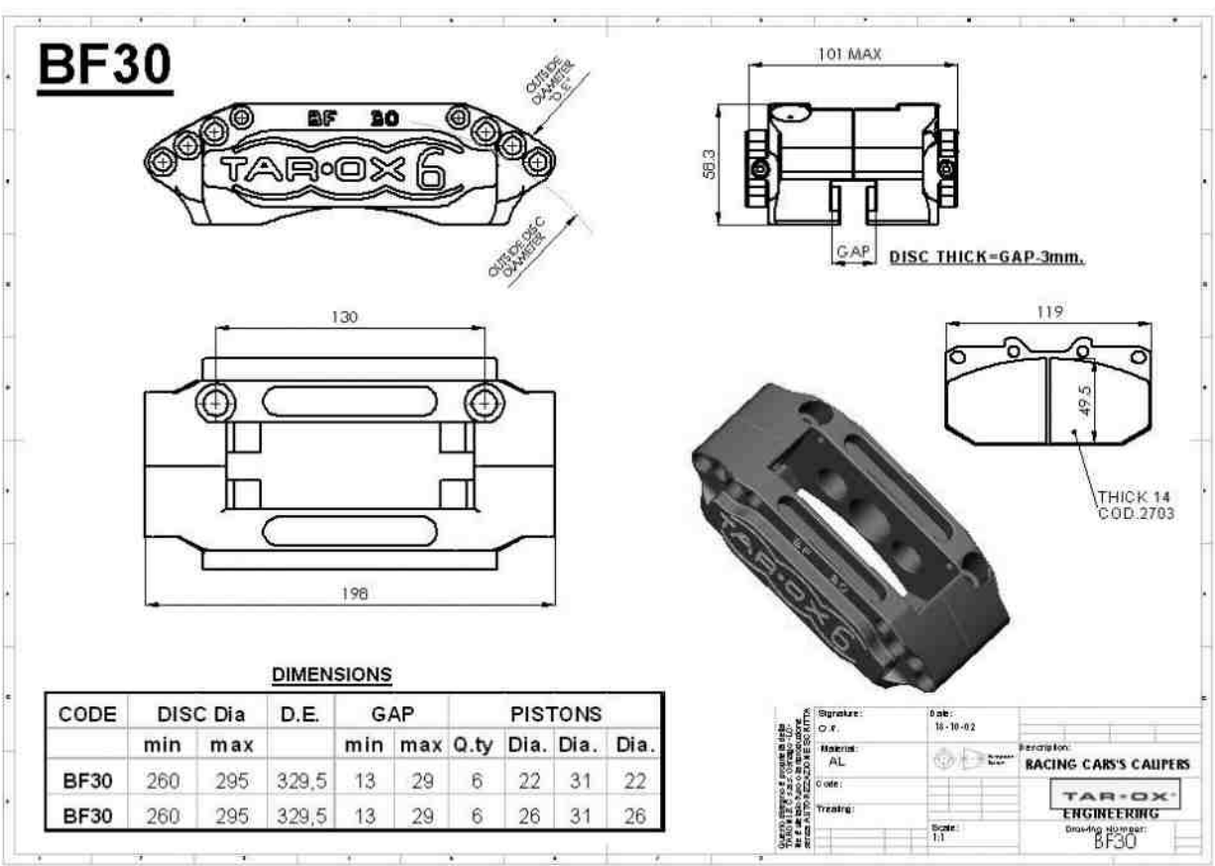

DIMENSIONS

CODE	DISC Dia		D.E.	GAP		PISTONS			
	min	max		min	max	Q.ty	Dia.	Dia.	Dia.
BF30	260	295	329,5	13	29	6	22	31	22
BF30	260	295	329,5	13	29	6	26	31	26

BF34

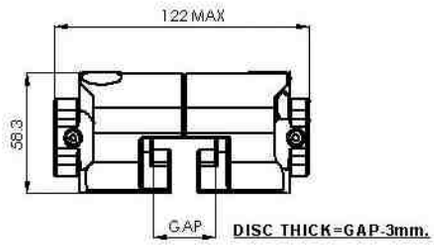

DISC THICK=GAP-3mm.

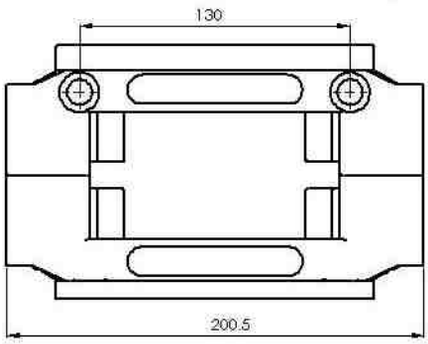

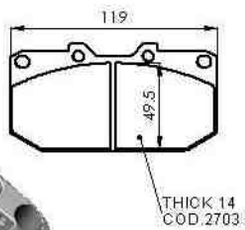

DIMENSIONS

CODE	DISC Dia		D.E.	GAP		PISTONS			
	min	max		min	max	Q.ty	Dia.	Dia.	Dia.
BF34	260	340	373	13	33	6	22	31	22
BF34	260	340	373	13	33	6	26	31	26

Signature: O.V. Date: 16-10-02
Material: AL
Code:
Treating:
Scale: 1:1
Description: RACING CARS'S CALIPERS
TAR-OX ENGINEERING
Drawing Number: BF34

B320-6

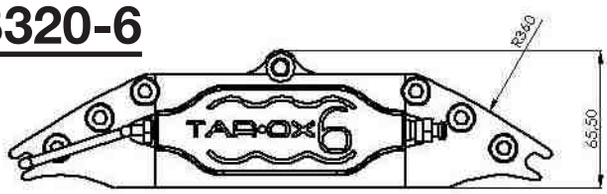

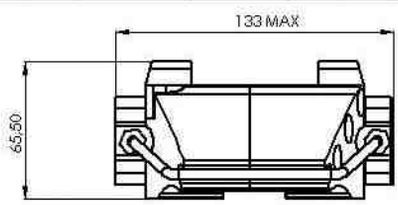

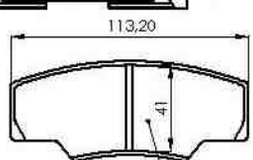

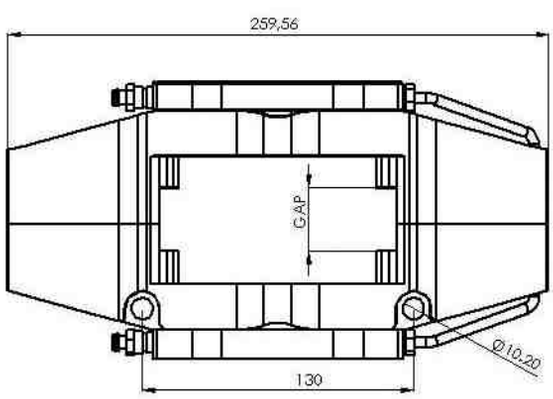

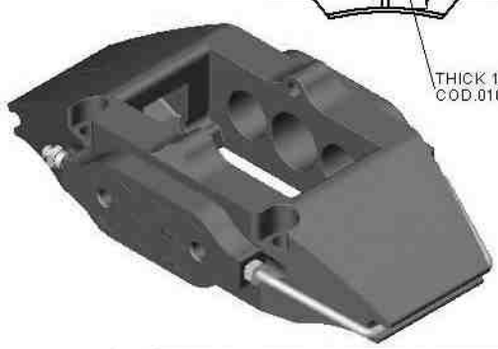

CODE	DISC Dia		D.E.	GAP		PISTONS			
	min	max		min	max	Q.ty	Dia.	Dia.	Dia.
B320-6	300	320	392	33	40	12	16	16	26

Signature: C.V. Date: 2-6-02-04
Material: AL
Code:
Treating:
Scale: 1:1
Description: RACING CARS CALIPER
TAR-OX ENGINEERING
Drawing Number: B320-12

B32-6

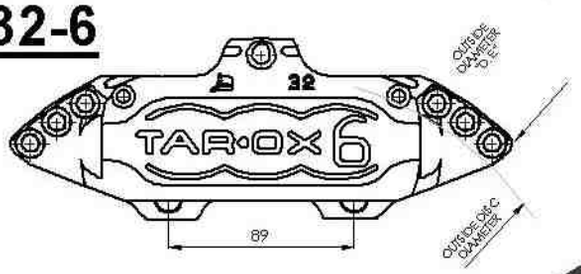

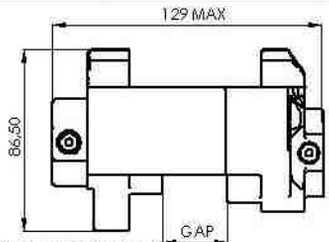

DISC THICK=GAP-3mm.

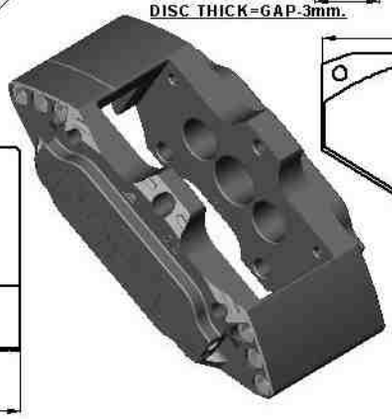

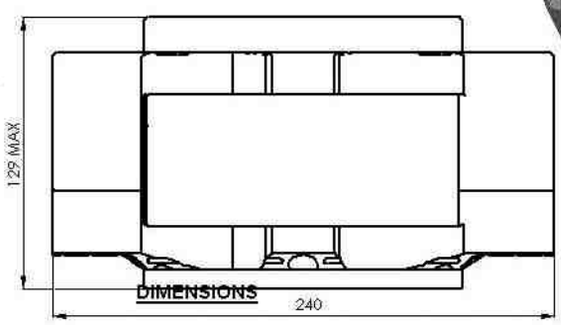

DIMENSIONS

CODE	DISC Dia		D.E.	GAP		PISTONS			
	min	max		min	max	Q.ty	Dia.	Dia.	Dia.
B32-6	290	330	351	13	35	6	31	34	31
B32-6	290	330	351	13	35	6	26	31	26

Signature: O.F.
Date: 18-10-02
Material: AL
Code:
Treating:
Scale: 1:1
Description: RACING CARS'S CALIPERS
TAR-OX ENGINEERING
Drawing Number: B32-6

B32-10

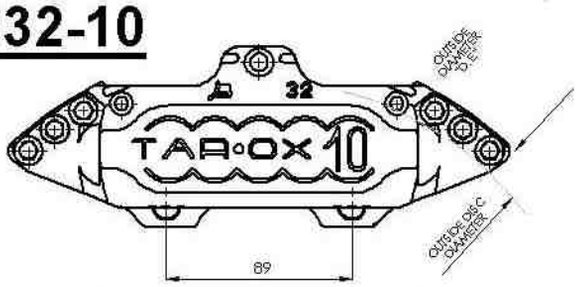

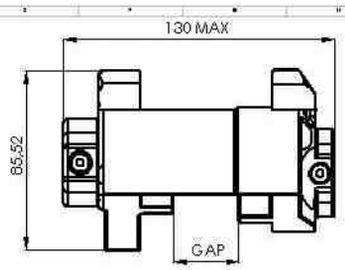

DISC THICK=GAP-3mm.

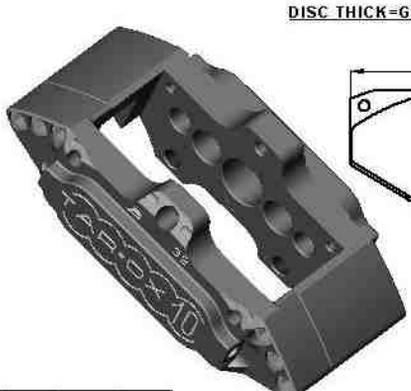

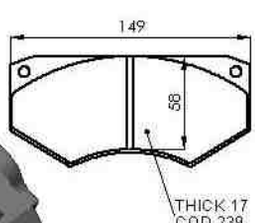

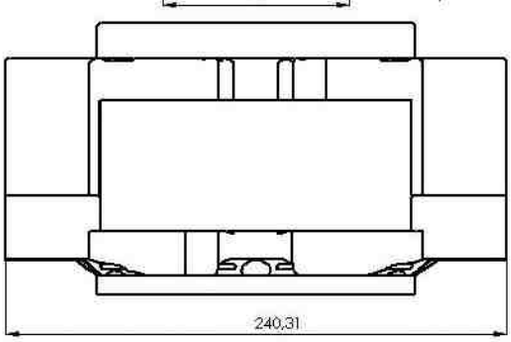

DIMENSIONS

CODE	DISC Dia		D.E.	GAP		PISTONS					
	min	max		min	max	Q.ty	Dia.	Dia.	Dia.	Dia.	Dia.
B32-10	290	330	351	13	35	10	22	22	22	22	22
B32-10	290	330	351	13	35	10	16	22	31	22	16

Signature: O.F.
Date: 18-10-02
Material: AL
Code:
Treating:
Scale: 1:1
Description: RACING CARS'S CALIPERS
TAR-OX ENGINEERING
Drawing Number: B32-10

B32-GT-10

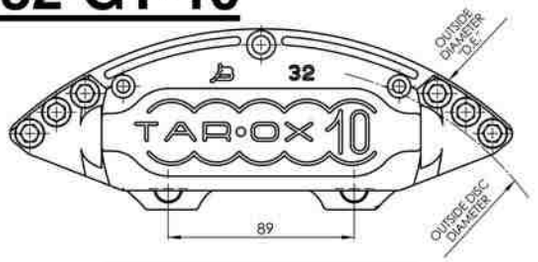

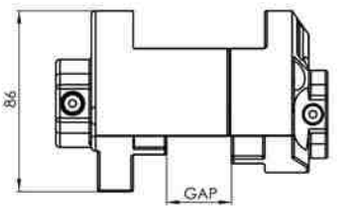

DISC THICK=GAP-3mm.

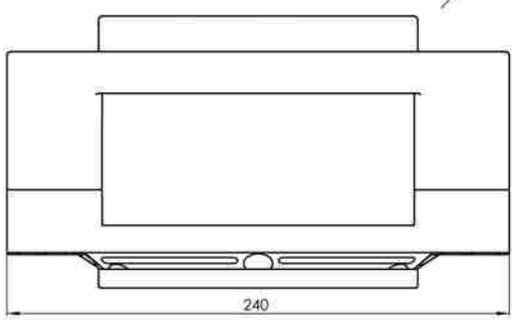

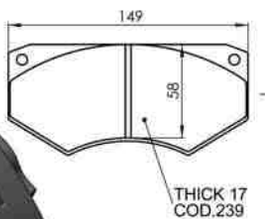

DIMENSIONS

CODE	DISC Dia		D.E.	GAP		PISTONS					
	min	max		min	max	Q.ty	Dia.	Dia.	Dia.	Dia.	Dia.
B32-10	290	330	351	13	35	10	22	22	22	22	22
B32-10	290	330	351	13	35	10	16	22	31	22	16

Signature: O.V. | Date: 18-10-02 | Description: RACING CARS'S CALIPERS
Material: AL | Code: | Treating: | Scale: 1:1
TAR·OX ENGINEERING
Drawing Number: B32-GT-10

B34-VC-6

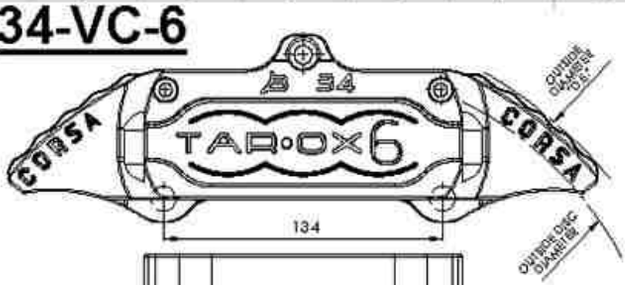

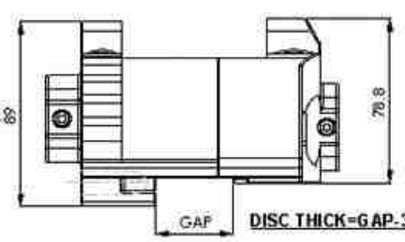

DISC THICK=GAP-3mm.

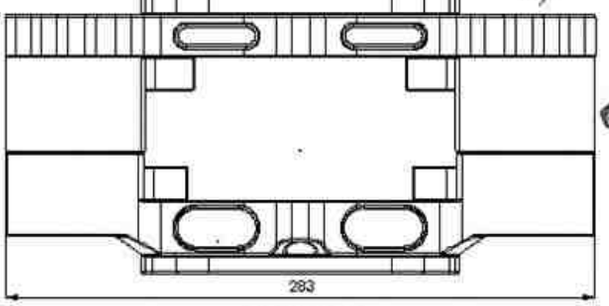

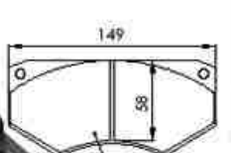

DIMENSIONS

CODE	DISC Dia		D.E.	GAP		PISTONS			
	min	max		min	max	Q.ty	Dia.	Dia.	Dia.
B34-VC-6	330	350	376	13	40	6	34	31	26
B34-VC-6	330	350	376	13	40	6	31	26	22
B34-VC-6	330	350	376	13	40	6	26	31	26
B34-VC-6	330	350	376	13	40	6	22	31	22

Signature: O.V. | Date: 18-10-02 | Description: RACING CARS'S CALIPERS
Material: AL | Code: | Treating: | Scale: 1:1
TAR·OX ENGINEERING
Drawing Number: B34-VC-6

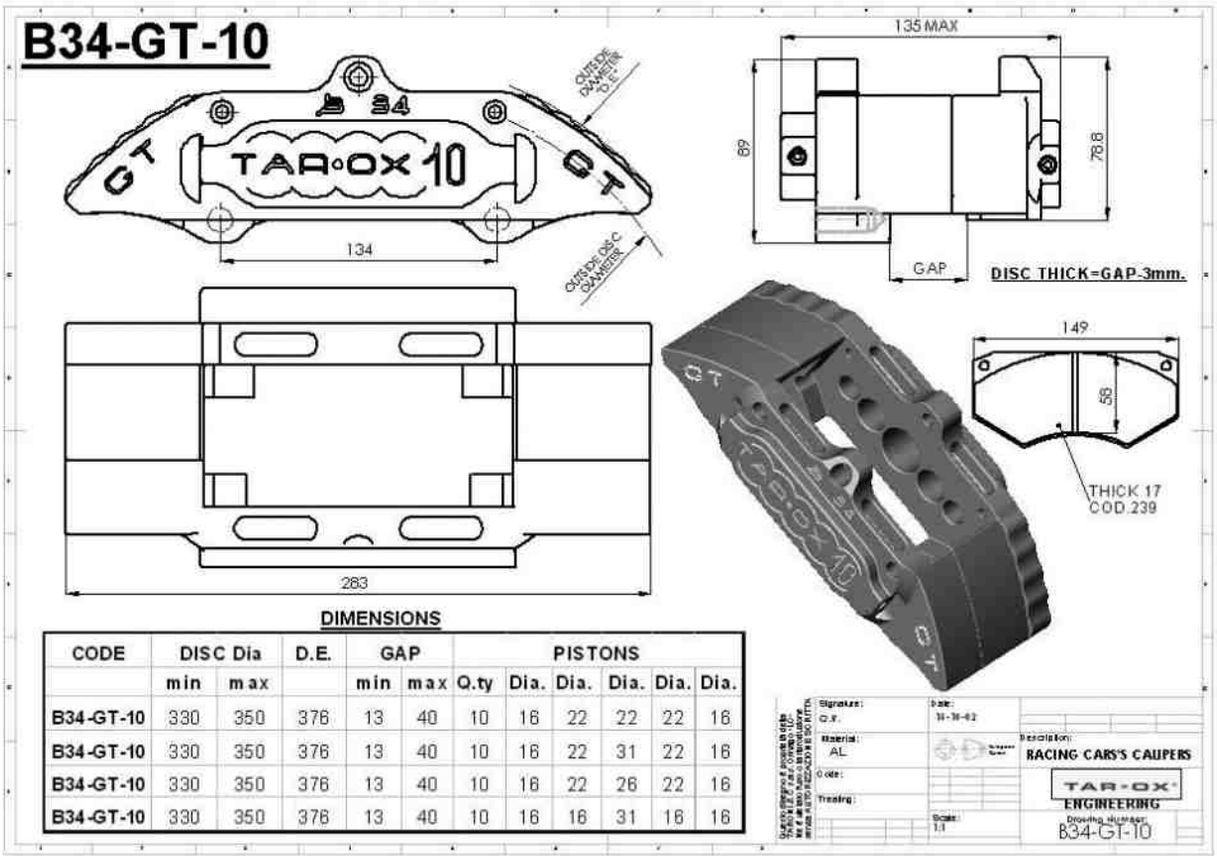

DIMENSIONS

CODE	DISC Dia		D.E.	GAP		PISTONS					
	min	max		min	max	Q.ty	Dia.	Dia.	Dia.	Dia.	Dia.
B34-GT-10	330	350	376	13	40	10	16	22	22	22	16
B34-GT-10	330	350	376	13	40	10	16	22	31	22	16
B34-GT-10	330	350	376	13	40	10	16	22	26	22	16
B34-GT-10	330	350	376	13	40	10	16	16	31	16	16

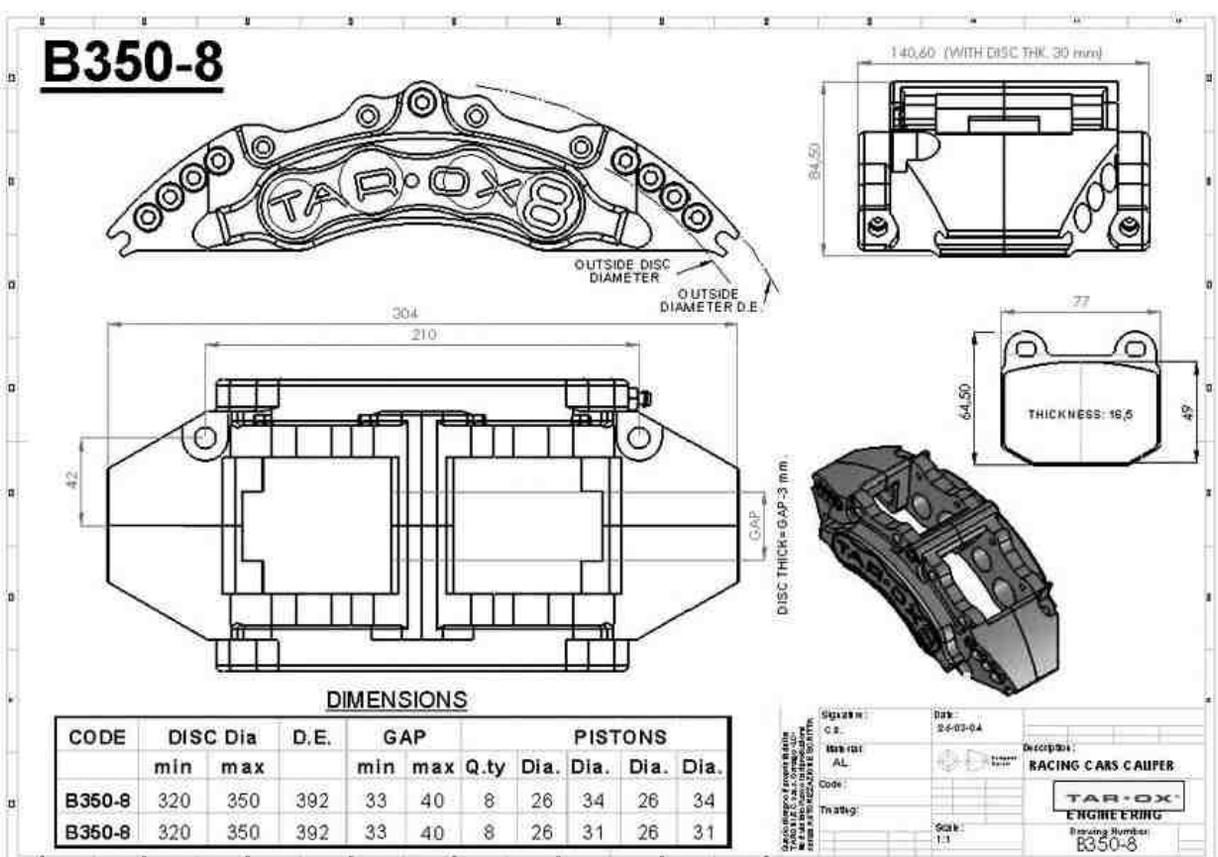

DIMENSIONS

CODE	DISC Dia		D.E.	GAP		PISTONS				
	min	max		min	max	Q.ty	Dia.	Dia.	Dia.	Dia.
B350-8	320	350	392	33	40	8	26	34	26	34
B350-8	320	350	392	33	40	8	26	31	26	31

B350-12

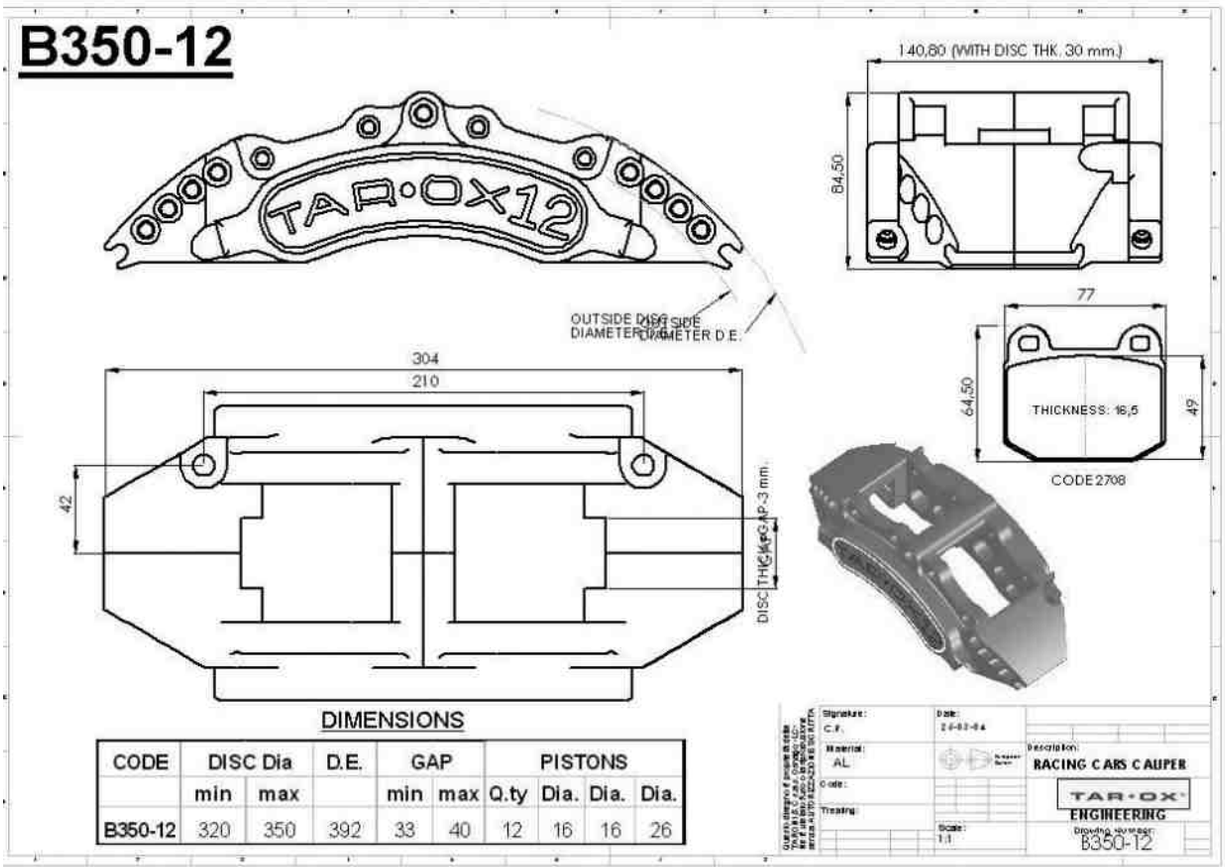

DIMENSIONS

CODE	DISC Dia		D.E.	GAP		PISTONS			
	min	max		min	max	Q.ty	Dia.	Dia.	Dia.
B350-12	320	350	392	33	40	12	16	16	26

B400-12

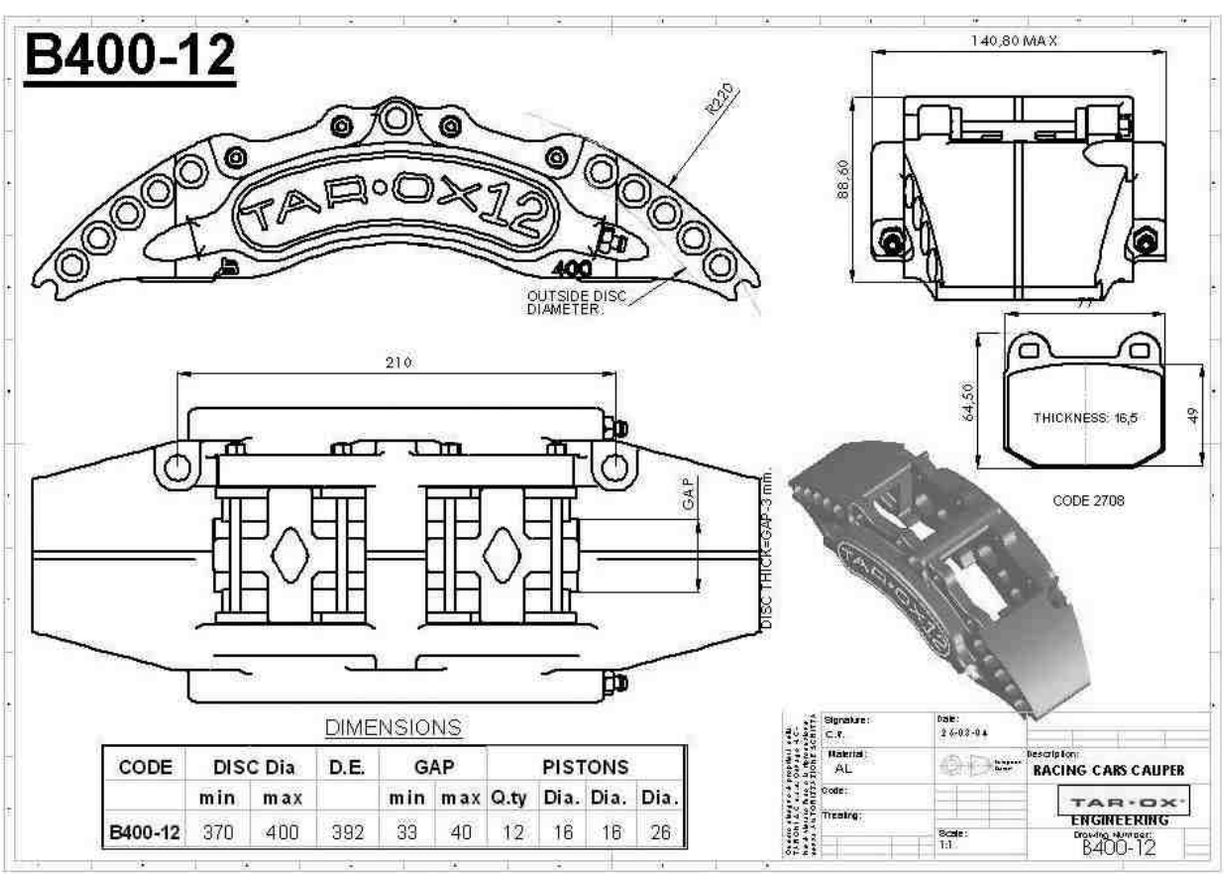

DIMENSIONS

CODE	DISC Dia		D.E.	GAP		PISTONS			
	min	max		min	max	Q.ty	Dia.	Dia.	Dia.
B400-12	370	400	392	33	40	12	16	16	26

B400-16-RT

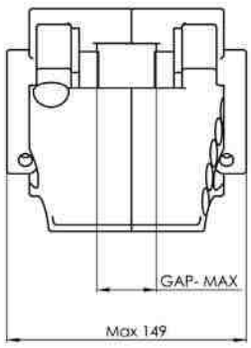

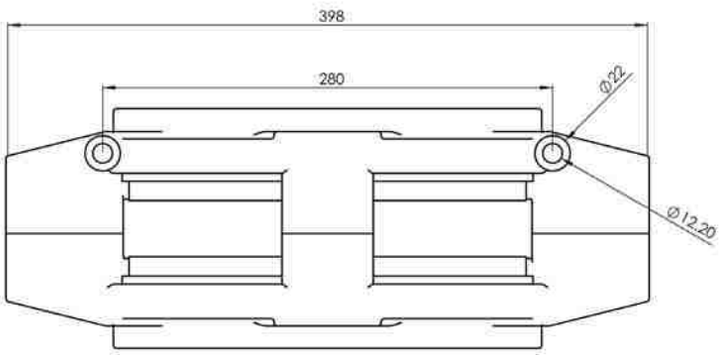

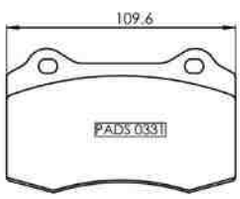

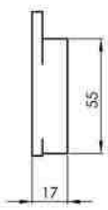

CODE	DISC Dia		DIA.E.	GAP		PISTONS				
	min	max		min	max	Q.ty	Dia.	Dia.	Dia.	Dia.
B400-RT-16	380	400	440	29	37	16	4x16	4x16	4x22	4x22

Questo disegno è proprietà della TAR-OX ENGINEERING S.r.l. Non può essere riprodotto, ceduto o trasmesso senza AUTORIZZAZIONE SCRITTA

Signature: O.F.	Date: 18-07-07	
Material: AL		Description: RACING CARS'S CALIPERS
Code:		TAR-OX ENGINEERING
Treating:	Scale: 1:1	Drawing Number: B400-RT

TAR OX
MADE IN THE EU
TRX-501-GH
2603 0 501
1566426
TAR OX
MADE IN THE EU
TRX-501-GH
2603 0 501
1566426
TAR OX
MADE IN THE EU
TRX-501-GH
2603 0 501
1566426

TAR OX PADS

1. Brake Pads

For every caliper we have listed the relevant pads including the TAROX code.

These are usually available in the following TAROX racing compound.

Corsa (.114):

Recommended for those application when immediate braking action is required without warming up.
The high coefficient of friction (0.47) gives plenty of pedal feel and massive amounts of bite. Able to withstand temperatures of up to 800°C this pad has an optimum temperature range of 200°C to 400°C.

Corsa + (.501):

Designed for intensive track use they still offer braking power when cold. Will generate a transfer film when used hard on track which will contribute to extend discs life. Able to withstand temperatures of up to 900°C this pad has an optimum temperature range of 250°C to 550°C. Coefficient of Friction (μ) 0,48.

Sintered (.115):

They give a very hard, race car style pedal feel due to the very lowest compressibility level and although these pads are race orientated they still give the driver full control over braking effort. Able to withstand temperatures of over 900°C this pad has an optimum temperature range of 350°C to 650°C Coefficient of Friction (μ) 0,53.

Racing Gold (.601):

Suitable for race use only, has a superior release characteristic compared to other race materials making it easier to modulate. Will generate a transfer film when used hard on track which will help increase discs life compared to similar specced brake pads. Able to withstand temperatures of over 900°C this pad has an optimum temperature range of 300°C to 700°C. Coefficient of Friction (μ) 0,53.

Racing Replica (.116):

Suitable for race use only, these pads are manufactured by Ferodo for TAROX and have the same specification of DS 3000.

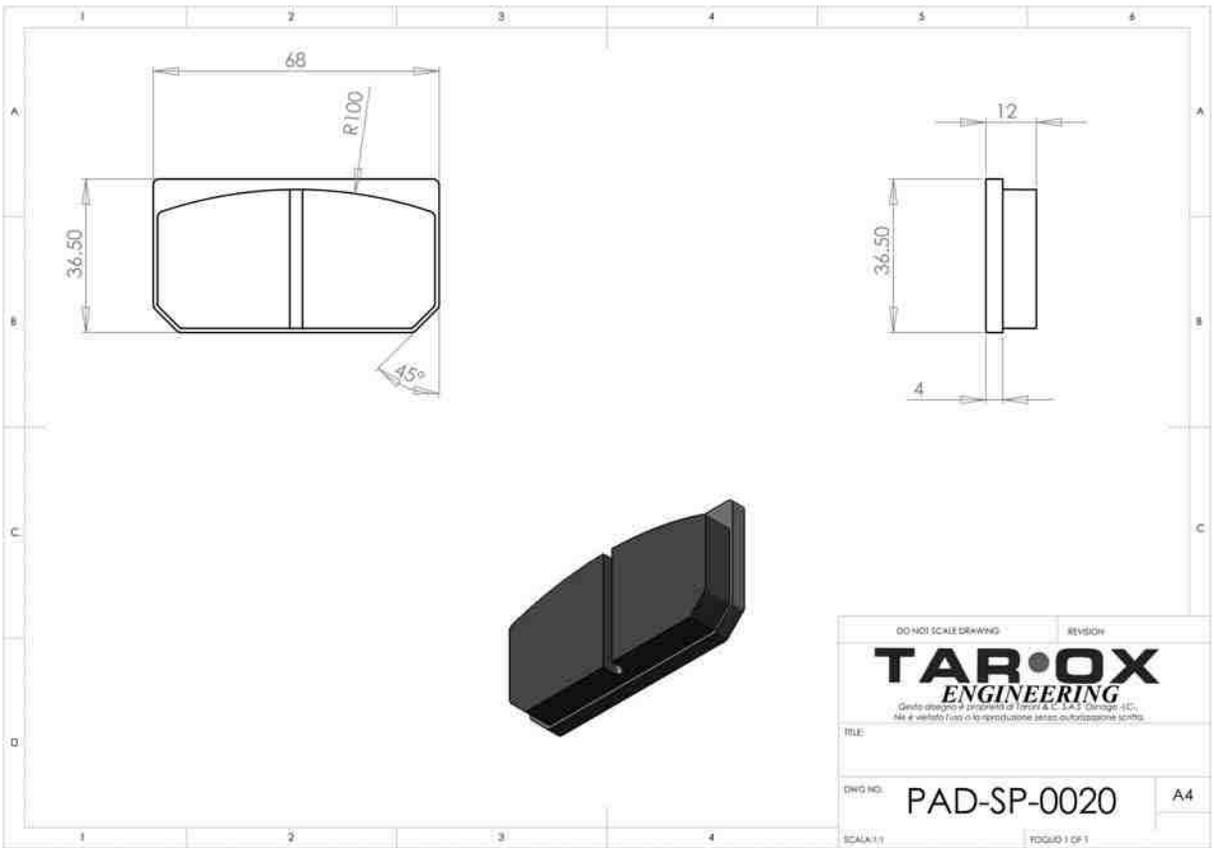
68
R100
36.50
45°
12
36.50
4
DO NOT SCALE DRAWING
REVISION
TAR•OX
ENGINEERING
TITLE:
DWG NO.
PAD-SP-0020
A4
SCALA 1:1
FOGLIO 1 OF 1

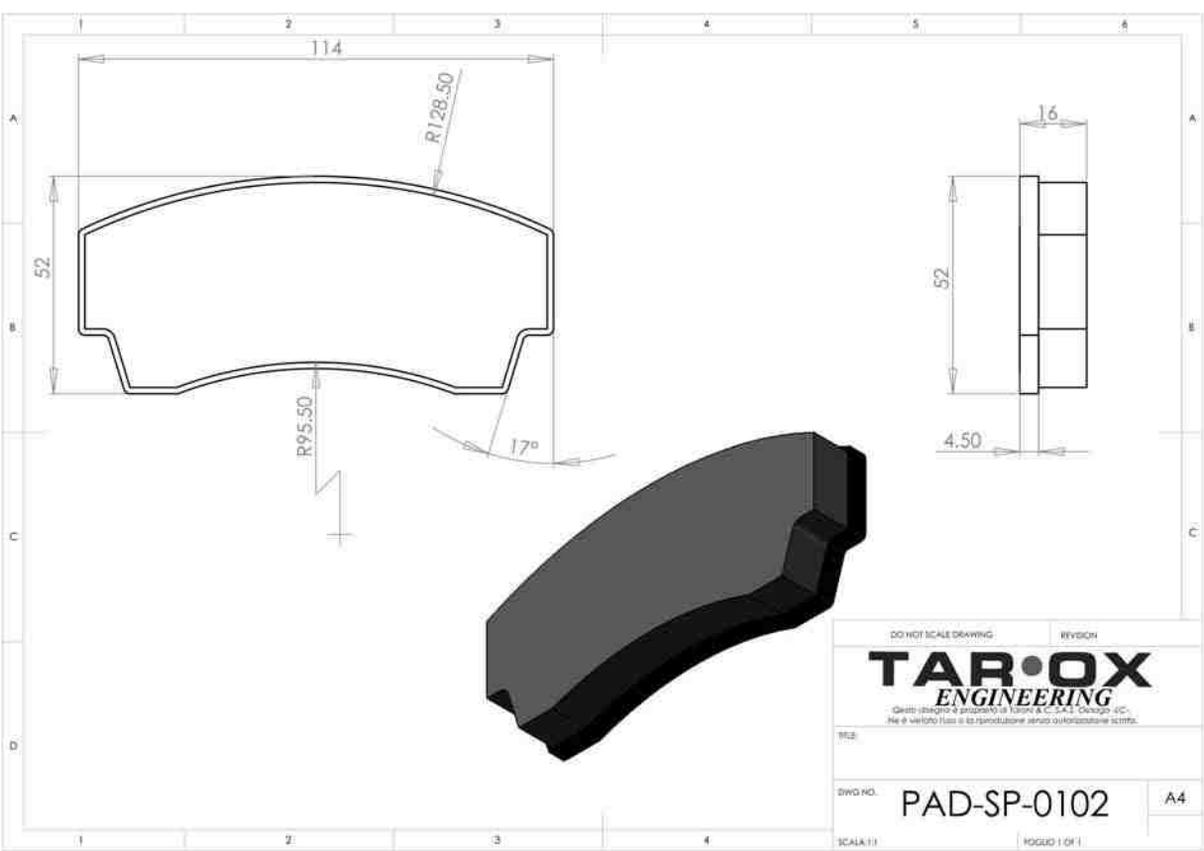
114
R128.50
52
R95.50
17°
16
52
4.50
DO NOT SCALE DRAWING
REVISION
TAR•OX
ENGINEERING
TITLE:
DWG NO.
PAD-SP-0102
A4
SCALA 1:1
FOGLIO 1 OF 1

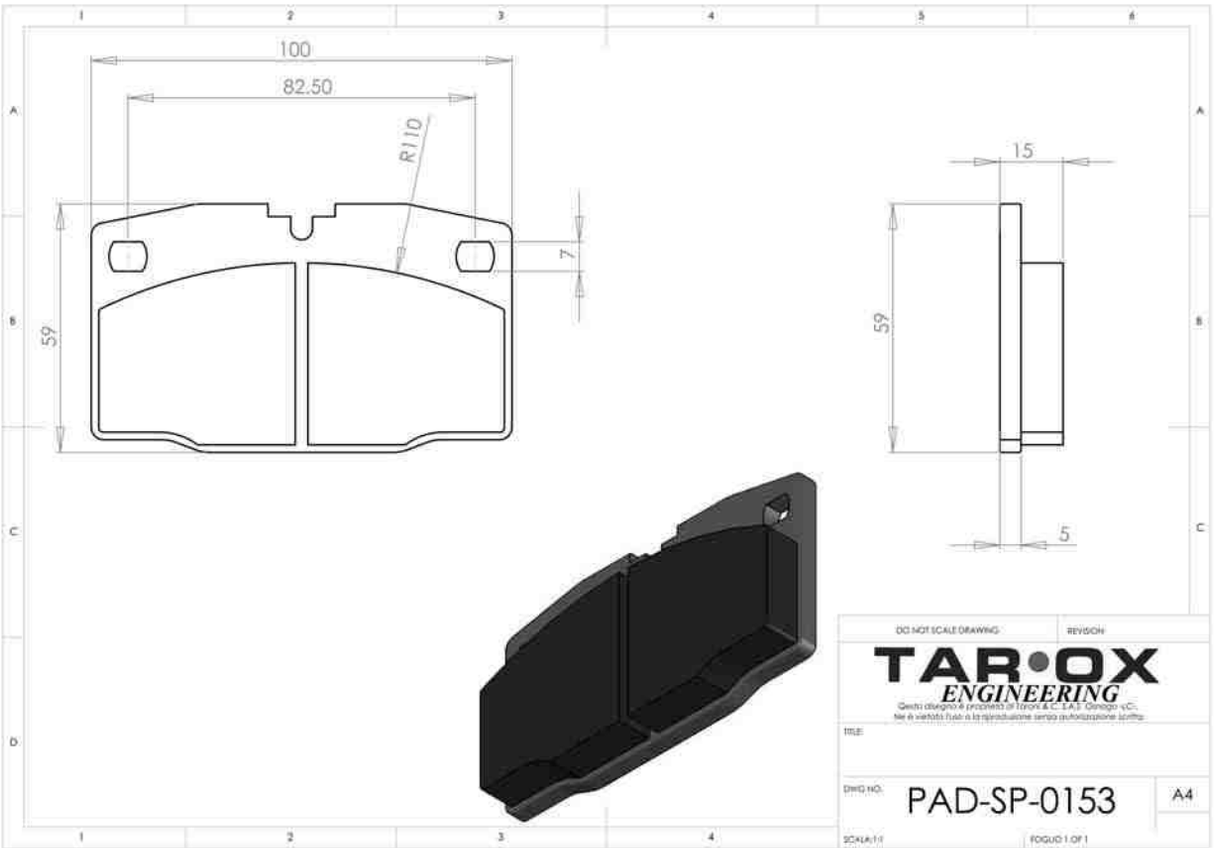
100
82.50
R110
7
59
15
59
5
DO NOT SCALE DRAWING
REVISION
TAR•OX
ENGINEERING
TITLE
DWG NO.
PAD-SP-0153
A4
SCALA:1:1
FOGLIO 1 OF 1

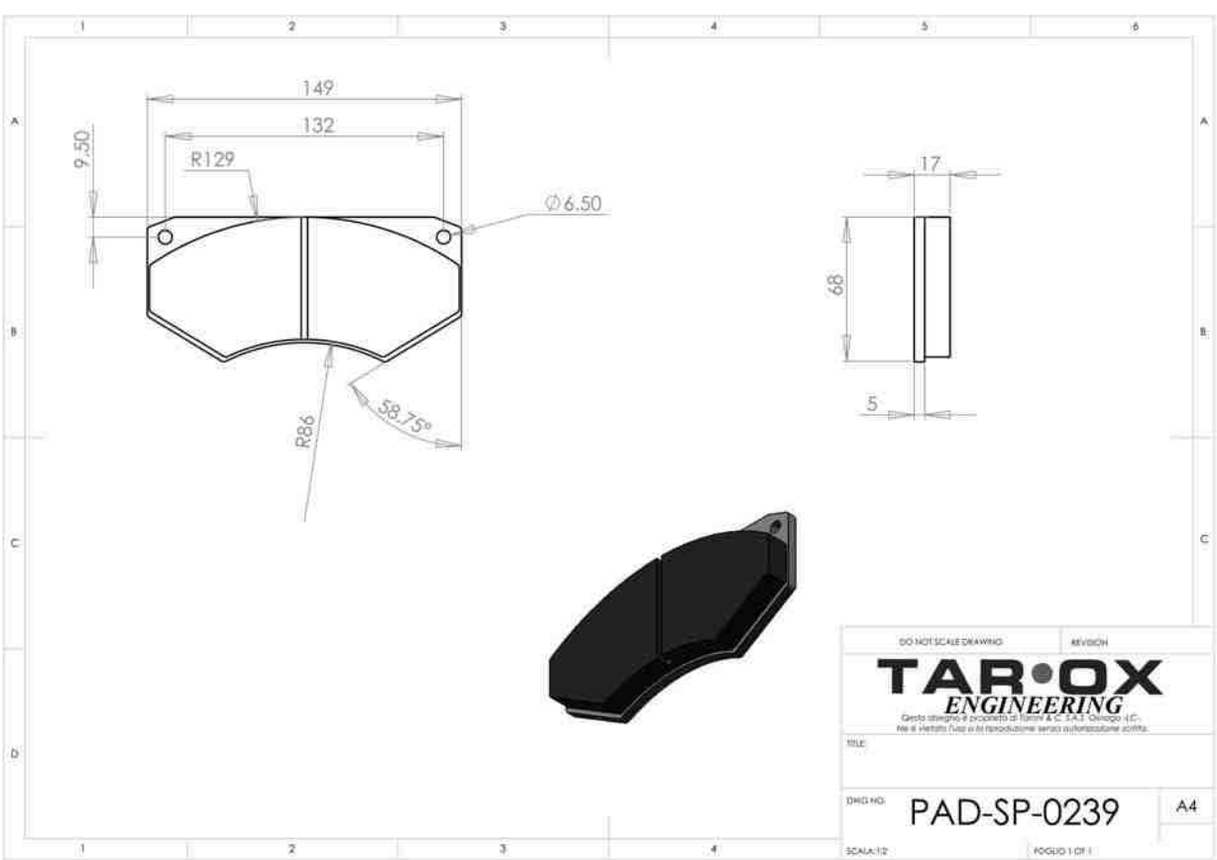
149
132
9.50
R129
Ø6.50
R86
58.75°
17
68
5
DO NOT SCALE DRAWING
REVISION
TAR•OX
ENGINEERING
TITLE
DWG NO.
PAD-SP-0239
A4
SCALA:1:2
FOGLIO 1 OF 1

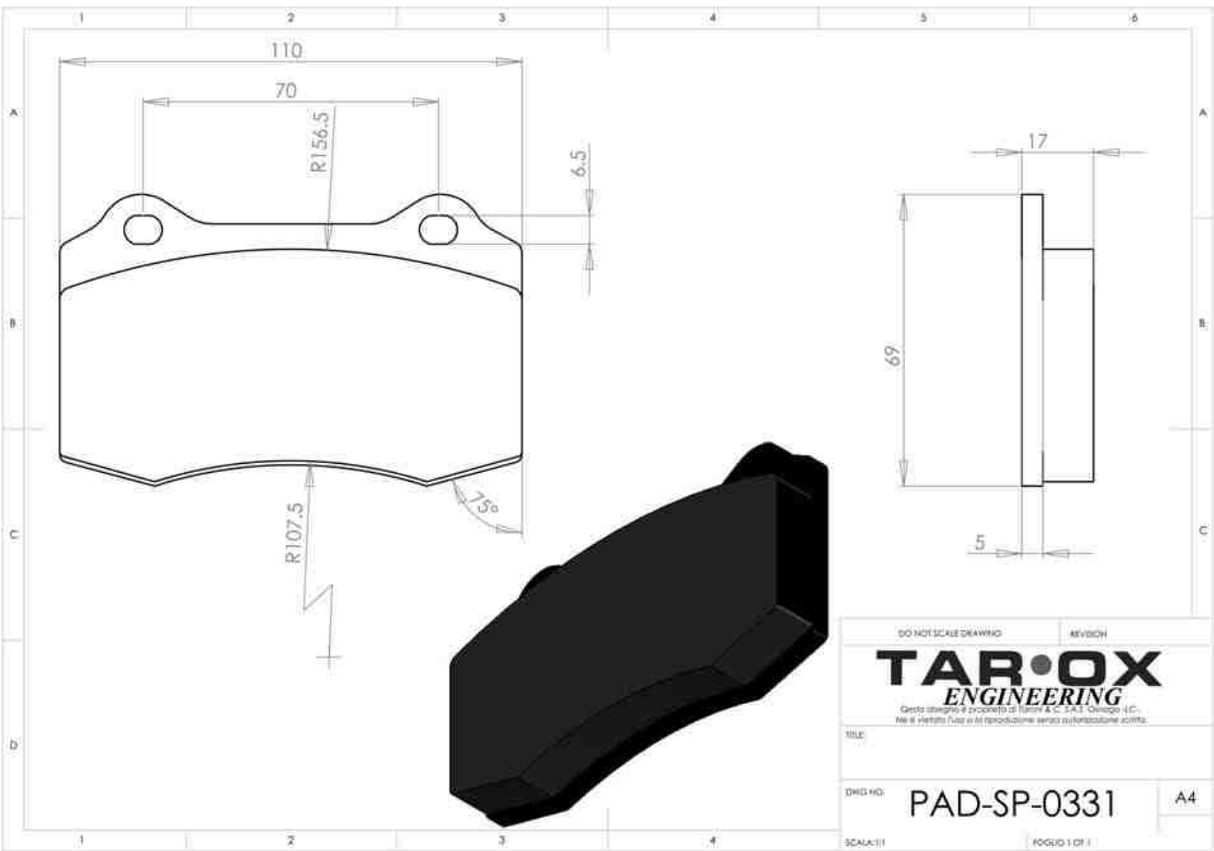
110
70
R156.5
6.5
17
69
R107.5
75°
5
DO NOT SCALE DRAWING
REVISION
TAROX
ENGINEERING
TITLE
DWG NO.
PAD-SP-0331
A4
SCALA:1:1
FOGLIO 1 OF 1

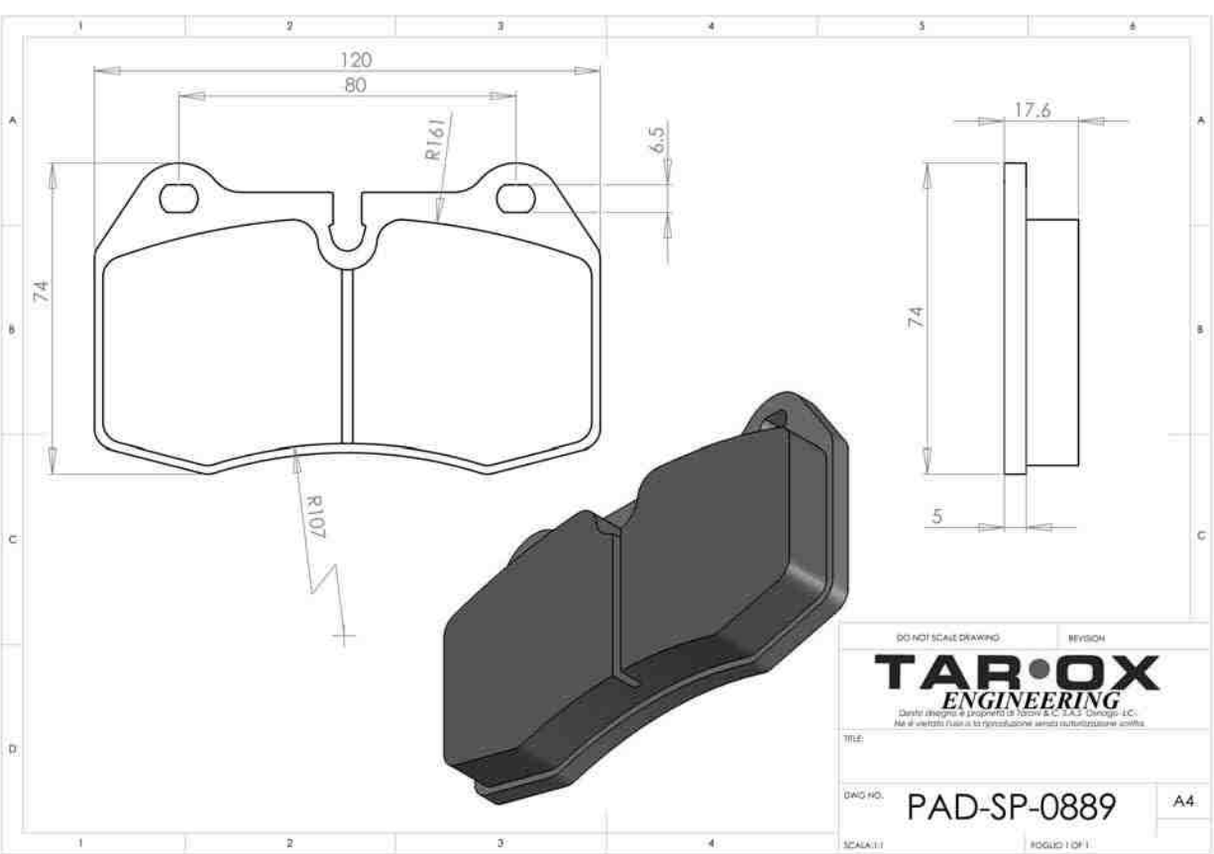
120
80
R161
6.5
17.6
74
74
R107
5
DO NOT SCALE DRAWING
REVISION
TAROX
ENGINEERING
TITLE
DWG NO.
PAD-SP-0889
A4
SCALA:1:1
FOGLIO 1 OF 1

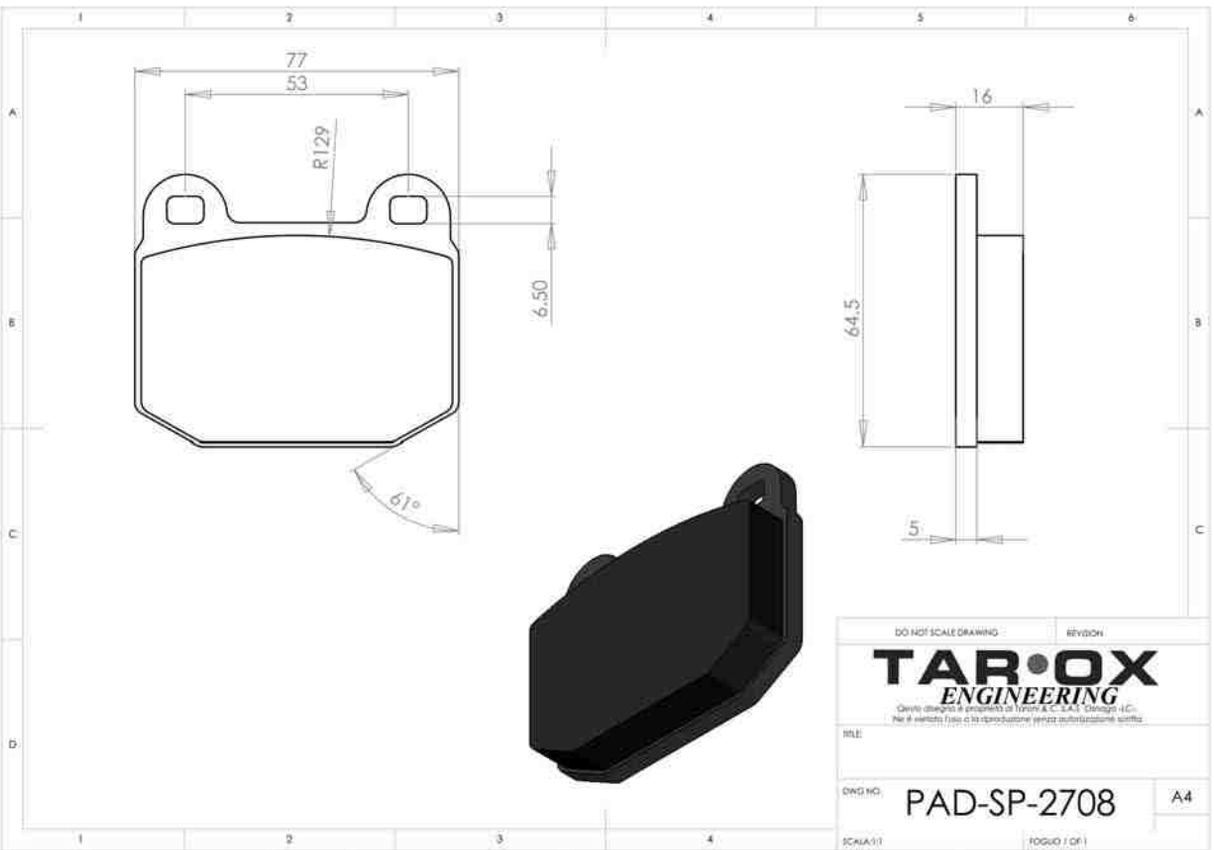
77
53
R129
6.50
61°
16
64.5
5
DO NOT SCALE DRAWING
REVISION
TAROX
ENGINEERING
TITLE:
DWG NO.
PAD-SP-2708
A4
SCALA:1:1
FOGLIO 1 OF 1